Operating Manual

Product name: Module 60/33

Product ID: 1145680

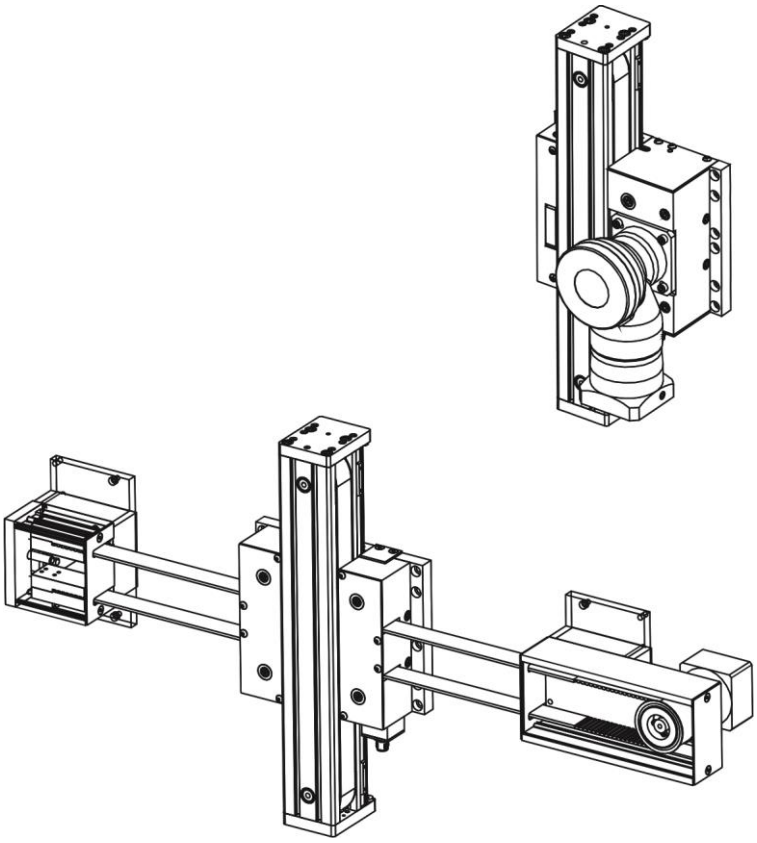

EN | Translation (EN) of the original instructions (DE)

IEF-Werner GmbH | Wendelhofstraße 6 | DE-78120 Furtwangen | www.ief-werner.de

Use

- The operating instructions must be available at the component at all times.
- The operating instructions must be available at the component/device at all times.
- Always use the complete original (or the original translation) of these operating instructions.

Supplier & Manufacturer

IEF-Werner GmbH
Wendelhofstraße 6
78120 Furtwangen /Germany
Phone: +49 7723-925-0
Telefax: +49 7723-925-100
www.IEF-Werner.de
info@IEF-Werner.de

Service

Find your IEF service station on our website:

- http://www.ief-werner.de

Legal Note

All rights, including translation, reserved. No part of the work must be reproduced in any manner (print, copy, microfilm or other method) without the written consent of IEF-Werner GmbH or processed, reproduced or distributed using electronic systems.

All rights reserved for the case of patent, utility sample or design patent entry reserved.

© August 2016, IEF-Werner GmbH, printed in Germany

Generated by: Frank Reichelt | MAN_EN_1145680_Module60-33_R1a.doc

Change History

Document Code	Date	Modification
MAN_EN_1145680_Module60-33_R1a.doc	August 2016	Translation of the original German operating manual: MAN_DE_1145679_Modul60-33.doc

Trademarks and trade names are used without any warranty of their free usability. Texts and examples have been created with great care. Nevertheless, errors cannot be excluded. IEF-Werner GmbH does not assume legal responsibility nor any liability for missing or incorrect statements or their consequences.

IEF-Werner GmbH reserves the right to modify or improve the software or hardware or parts of it, as well as the supplied documentation or parts of it, without previous notice.

We are always grateful for suggestions for improvements and information about errors.

Generated by: Frank Reichelt | MAN_EN_1145680_Module60-33_R1a.doc

Table of Contents

1 Declaration of Incorporation 7

2 Safety 9
2.1 Definition of Warning Notes 9
2.2 General Warning Notes 10
2.3 Special Hazard Warnings 11

3 Intended Use 13
3.1 Reasonably Foreseeable Misuse 13

4 Description of the main assemblies 15
4.1 Standard design module 60/33 15
4.2 Module 60/33 ZOM 18

5 Assembly Instructions 19
5.1 Installation Position 19
5.2 Description of the drive concept (pulley principle) 21
5.3 Cross installation 22
5.4 Attachment 23
5.4.1 Standard design module 60/33 23
5.4.2 Module 60/33 ZOM 24
5.4.3 Module 60/33 ZOM with adapter for cross-installation 24
5.4.4 Installation of Actuators 25
5.5 Motor attachment versions and gear types 26
5.6 Accessories 27
5.6.1 Mechanical stop 27
5.7 Wiring 28
5.7.1 Initiators 28
5.7.2 Limit switches 30
5.7.3 Technical Data of Initiators 32
5.7.4 Cable Routing 32
5.8 Technical Data 33
5.8.1 Tightening Torques for Screw Connection [Nm] 33
5.8.2 Technical Data of the Linear Unit 33
5.8.3 Type Label 34

6 Maintenance 37
6.1 Lubrication of Guide Carriage 37

7 Troubleshooting 39

8 Repair 41

Generated by: Frank Reichelt | MAN_EN_1145680_Module60-33_R1a.doc

8.1 Factory-setting of the toothed belt tension 41
8.2 Replace toothed belt 42
8.2.1 Module 60/33 42
8.2.2 Module 60/33 ZOM 44
8.3 Exchange guide carriages / guide rail 46
8.3.1 Exchange guide carriages module 60/33 46
8.3.2 Exchange guide carriages module 60/33 ZOM 48
8.4 Reference sides 50
8.4.1 Module 60/33 50
8.4.2 Module 60/33 ZOM 51

9 Parts Lists and Drawings 52
9.1 Module 60/33, parts list TG1002894 52
9.2 Module 60/33 ZOM, parts list TG1003181 57

Generated by: Frank Reichelt | MAN_EN_1145680_Module60-33_R1a.doc

1 Declaration of Incorporation

EC declaration of incorporation in the sense of the EC directive 2006/42/EC (machinery), Annex II B

The manufacturer:
IEF-Werner GmbH
Wendelhofstraße 6
DE 78120 Furtwangen - Germany

hereby declares that the following products (the incomplete machine/partial machine):

Designation	IEF-Werner parts number
Module 60/33	TG1002894
Module 60/33 ZOM	TG1003181

where possible based on the scope of delivery, corresponds to the following basic requirements of the directive on Machinery (2006/42/EC):
Annex I, item: 1.1.2; 1.1.3; 1.1.5; 1.3.2; 1.3.4; 1.5.1; 1.7.3;1.7.4;

The incomplete machine also corresponds to the following further directives:
Directive 2004/108/EC of the council, dated 15 December 2004, for harmonisation of the legal provisions of the member states on electromagnetic compatibility.
Directive 2006/95/EC of the council, dated 12 December 2006, for harmonisation of the legislation of the member states regarding electrical equipment for use within specified voltage thresholds.

The technical documents were generated according to Annex VII part B and may be electronically submitted to the national authorities upon justified request.
List of some applied harmonised standards:
DIN EN ISO 12100-1,-2 / DIN EN ISO 13857 / DIN EN ISO 13850 / DIN EN 60204-1:2006/A1:2009

Commissioning of the incomplete machine delivered by us is not permitted until it has been determined that the overall system into which the incomplete machine is installed meets the basic safety and health protection requirements according to Annex I of the above
EC directive 2006/42/EC.

Name of the documentation officer: Frank Reichelt, technical editor
Address of the documentation officer: see manufacturer's address

Furtwangen, August 2016

Manfred Bär (managing director)

Generated by: Frank Reichelt | MAN_EN_1145680_Module60-33_R1a.doc

2 Safety

2.1 Definition of Warning Notes

⚠ DANGER

Indicates danger.

Non-observance of the safety provisions causes death.

⚠ WARNING

Indicates potential danger.

Non-observance of the safety provisions may cause death or severe injury.

⚠ ATTENTION

Indicates potential danger.

Non-observance of the safety provisions may cause injury.

CAUTION

Indicates potential danger. Non-observance of the safety provisions may cause property damage.

Generated by: Frank Reichelt | MAN_EN_1145680_Module60-33_R1a.doc

2.2 General Warning Notes

The linear module 60/33 or the ZOM version must only be commissioned by specialists who received safety-technical instruction and are able to assess potential dangers.

Furthermore, all chapters of these operating instructions must have been read and understood completely.

⚠ DANGER

Warning of dangerous electrical voltage.

The system must be powered down for all assembly, disassembly or repair work. Non-observance of the safety provisions may cause death.

⚠ WARNING

Linear modules must only be operated with their protective devices.

Linear modules always have to be operated in connection with suitable safety devices (e.g., safety cell, protective room, protective housing, light curtain).

⚠ ATTENTION

Do not remove plugs or clamps when live.

Motor connectors or clamps must not be inserted or disconnected when live. Risk of burning of the contacts and risk of flying sparks.

⚠ ATTENTION

Warning of hot surface.

During operation, the heated drive may cause skin burns when touched. Install a protective device, if possible! Do not touch the marked areas or wait for an adequate cooling time.

Generated by: Frank Reichelt | MAN_EN_1145680_Module60-33_R1a.doc

2.3 Special Hazard Warnings

In addition, this instructions also contains the following special hazard warnings:

⚠ WARNING

Warning of shearing off of limbs.

These points of the components pose the danger of shearing off of limbs in operation.

⚠ WARNING

Warning of crushing of limbs.

These points of the components pose the danger of crushing of limbs in operation.

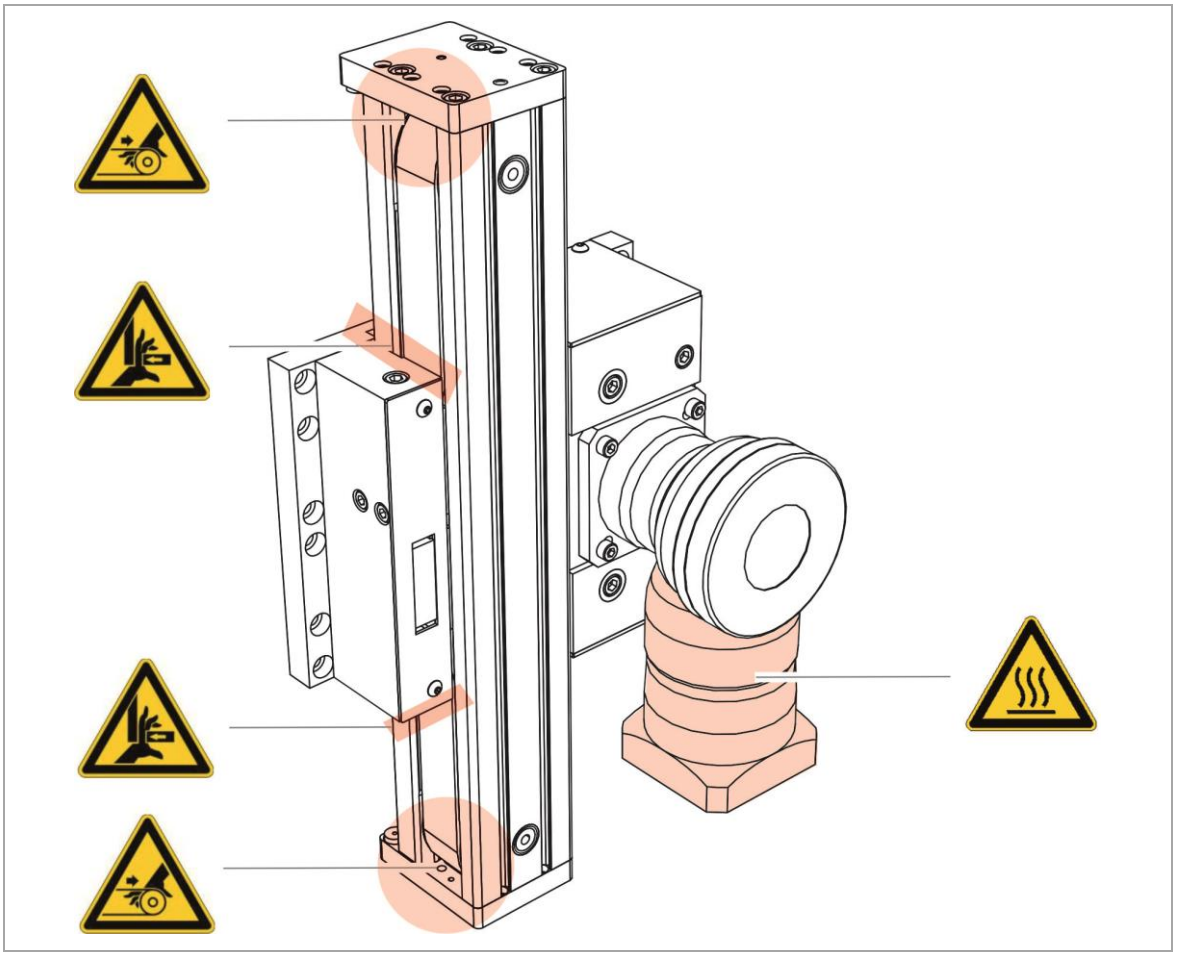

Figure 1 Dangers at the module 60/33

Generated by: Frank Reichelt | MAN_EN_1145680_Module60-33_R1a.doc

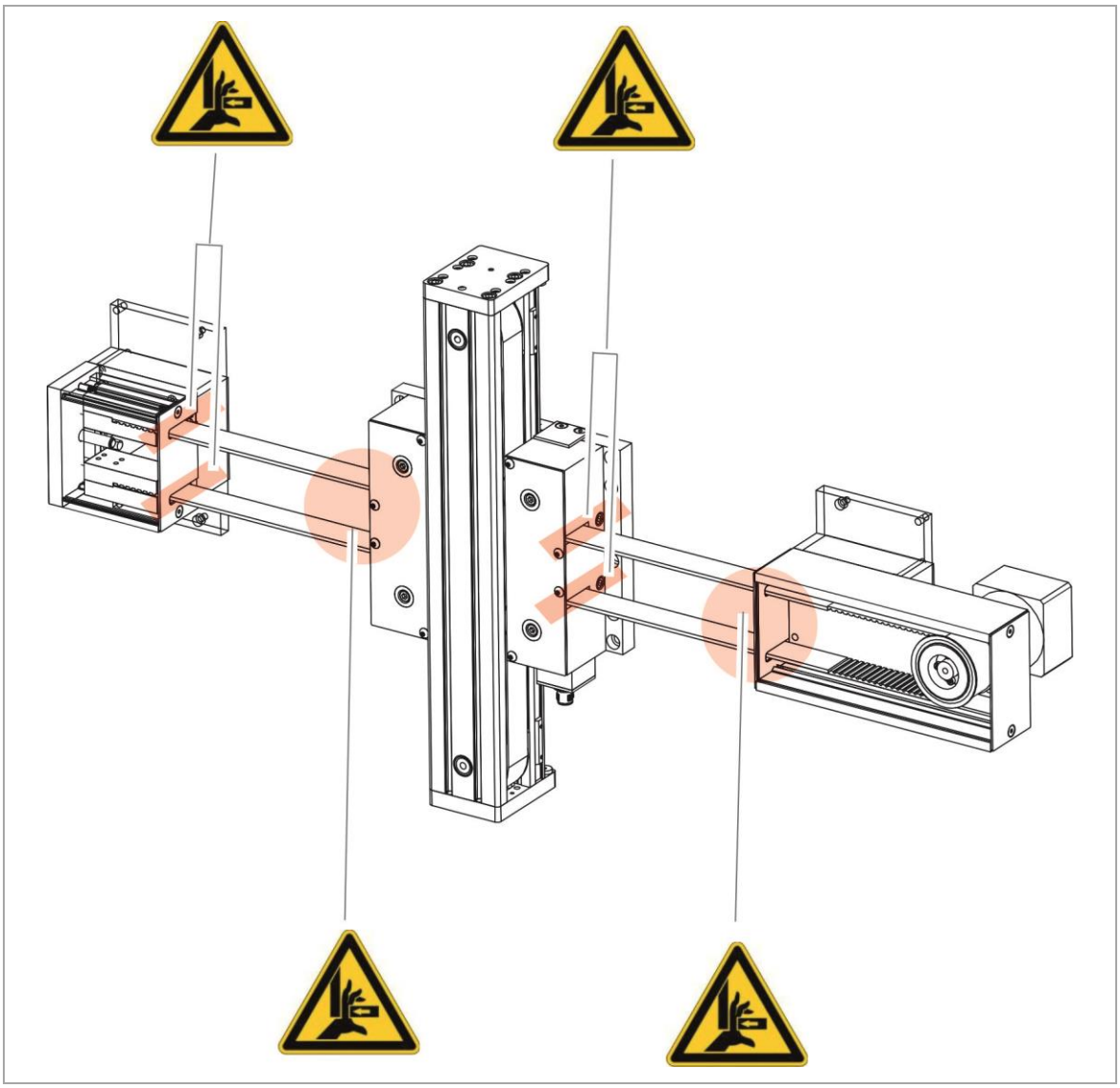

Figure 2 Dangers at the module 60/33 ZOM

Please observe that the middle assembly (in Figure 2, top) is also subject to the dangers named in Figure 1, 11.

Generated by: Frank Reichelt | MAN_EN_1145680_Module60-33_R1a.doc

3 Intended Use

The linear unit module 60/33 (see Figure 3, bottom) was designed for use in the commercial area. Use of a high-quality guide (guide rail and guide carriage) warrants high dynamics and good running behaviour. The guide carriages are equipped with wipers to prevent ingression of coarse dirt into the guide carriage.
Use of the linear unit under conditions with increased contamination and abrasive dusts, however, should be avoided because there are no further protective measures like bellows, etc. The primary usage area is that of a vertical axis. In combination with many standardised assembly elements, as well as the other components of IEF-Werner GmbH, it can be used to build complex multi-axis positioning systems as well.

The "ZOM" design is intended for combination with a second linear unit (e.g.: module 115/42 or module 160 /15). In this design, the motor is placed fixed at the end of the second linear unit.

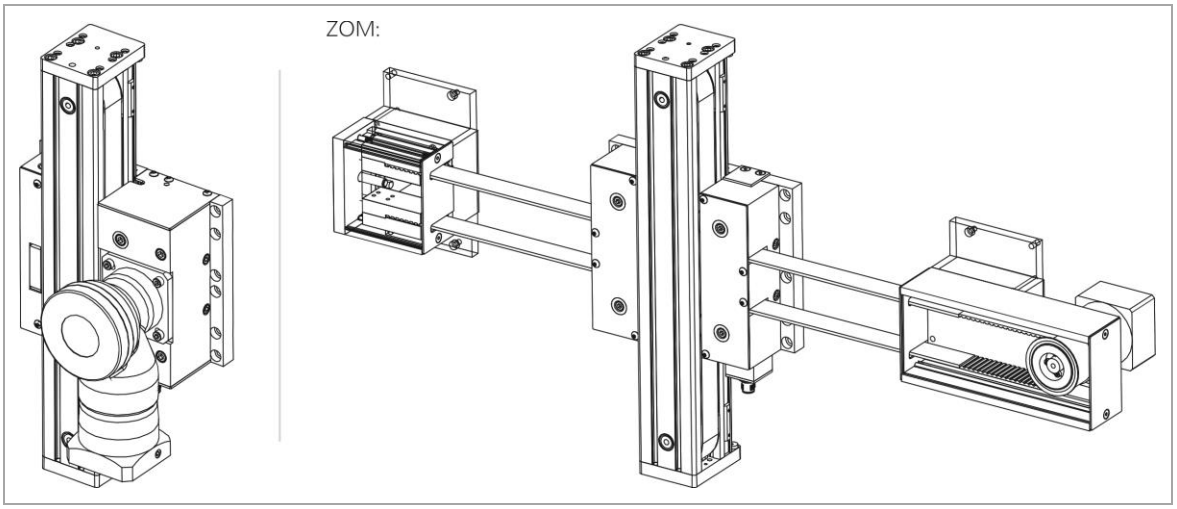

Figure 3 Linear unit module 60/33 (standard and ZOM-design)

Areas of use of the module 60/33 include:

- Equipment and mounting systems
- Handling of small parts
- Loading and unloading stations
- etc.

3.1 Reasonably Foreseeable Misuse

The linear unit module 60/33 is not to be used for certain applications such as the transport of persons and animals or as a pressing/bending device.

Use of the linear unit without additional measures is also not possible in special fields of application, such as the chemical or food industry or in explosive atmospheres.

In case of doubt, consult the manufacturer.

Generated by: Frank Reichelt | MAN_EN_1145680_Module60-33_R1a.doc

4 Description of the main assemblies

4.1 Standard design module 60/33

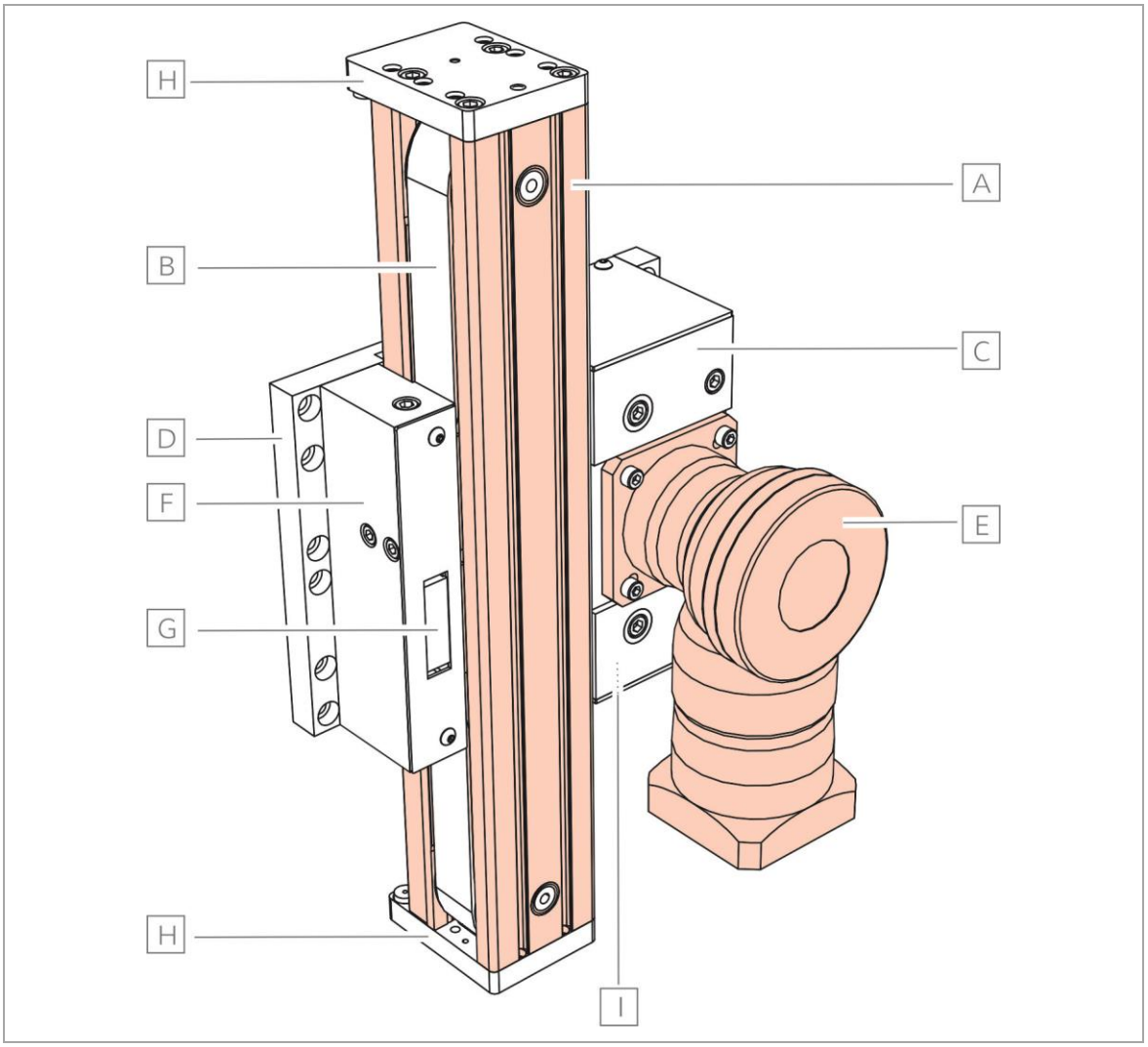

Figure 4 Overview main assemblies module 60/33 (design standard) (figure 1 of 3)

A Basic body (coloured)
B Toothed belt
C Shaft housing
D Adapter plate
E Planetary gear (coloured)
F Bracket plate
G Counterpiece spanner
H End plates
I Concealed: Installation plug connector

Generated by: Frank Reichelt | MAN_EN_1145680_Module60-33_R1a.doc

Continuation of the figures of the main assemblies (design standard):

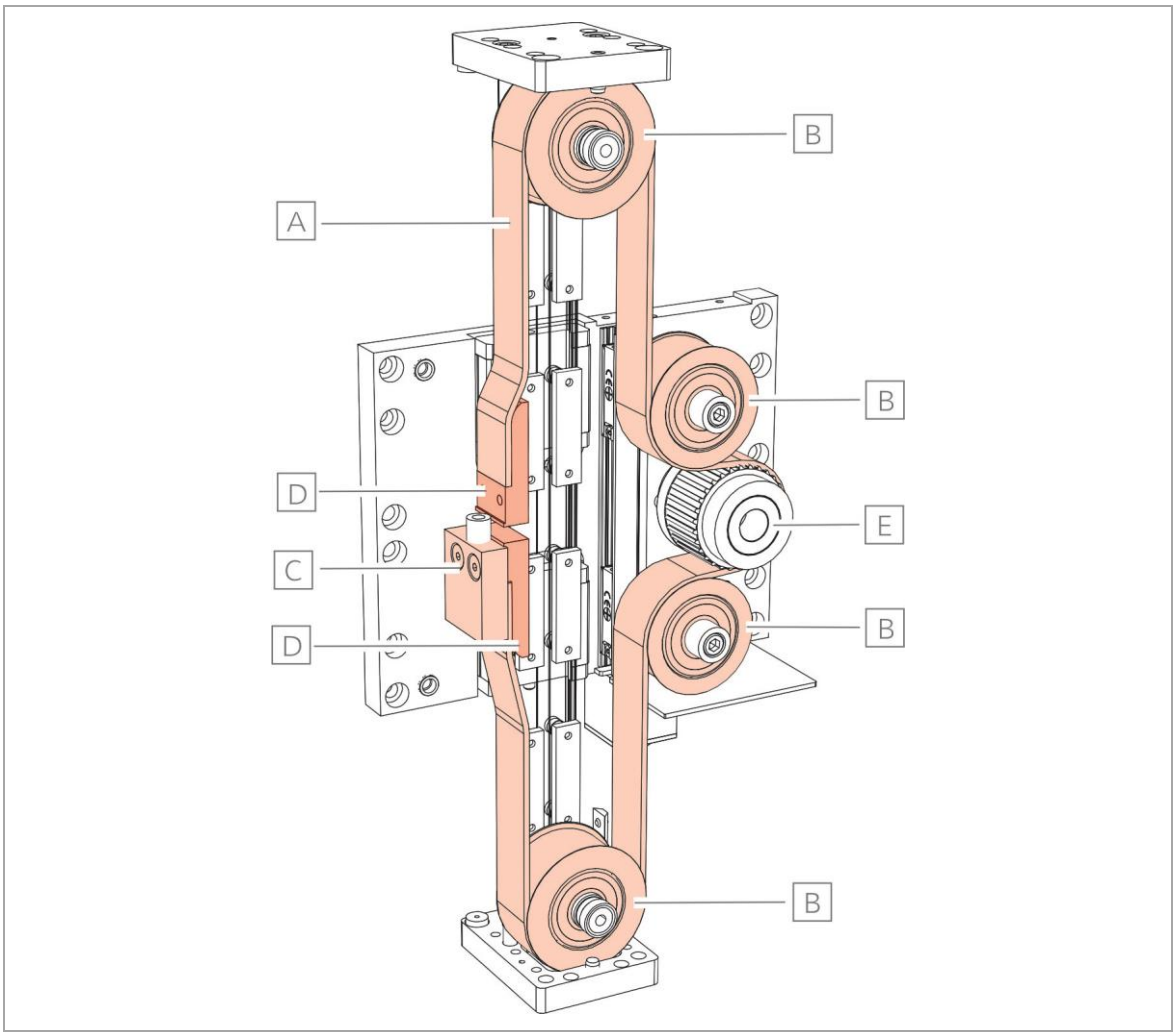

Figure 5 Overview main assemblies module 60/33 (design standard) (figure 2 of 3)

A Toothed belt
B Deflector rollers
C Counterpiece tensioner
D Belt receptacle (2x)
E Toothed lock washer with clamping set (drive-side)

Generated by: Frank Reichelt | MAN_EN_1145680_Module60-33_R1a.doc

Continuation of the figures of the main assemblies (design standard):

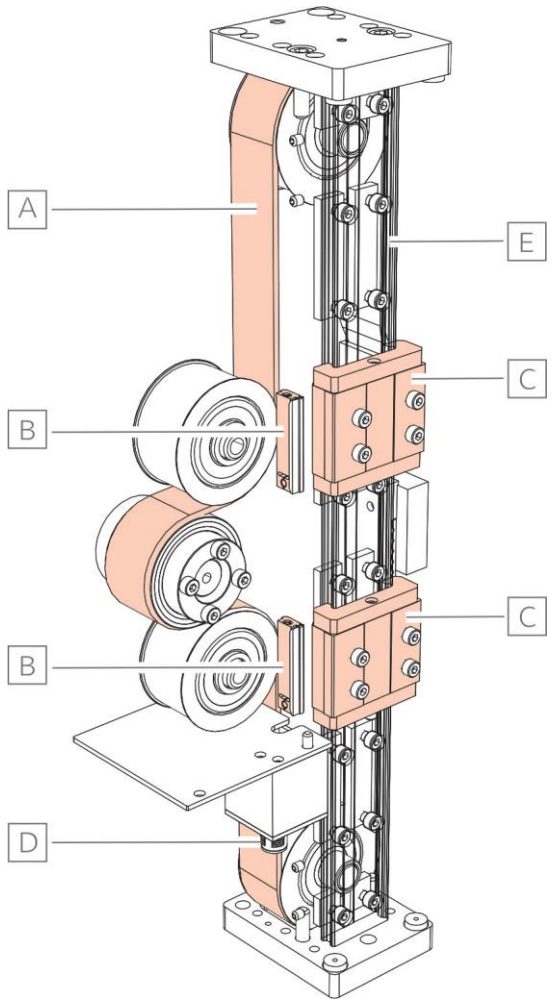

Adapter plate concealed / view on the rear

Figure 6 Overview main assemblies module 60/33 (design standard) (figure 3 of 3)

A Toothed belt
B Inductive switch/initiator
C Guide carriage (2x)
D Installation plug connector
E Guide rail (transparent)

Generated by: Frank Reichelt | MAN_EN_1145680_Module60-33_R1a.doc

4.2 Module 60/33 ZOM

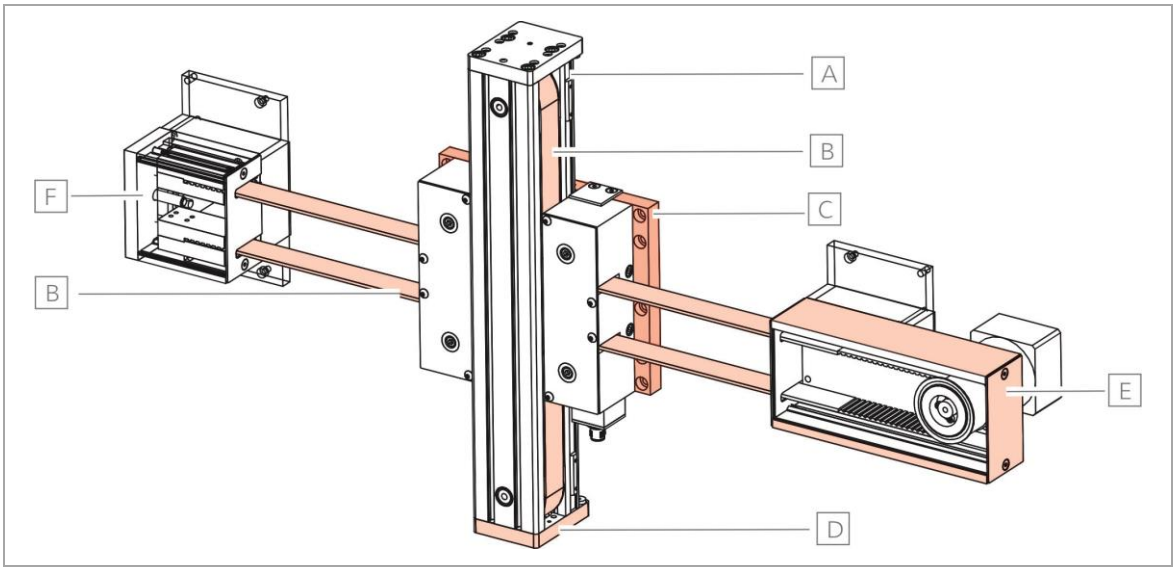

Figure 7 Overview main assemblies module 60/33 (design ZOM) (figure 1 of 2)

A Basic body
B Toothed belt
C Adapter plate
D End-plate (2x)
E Gear housing
F Housing for toothed belt attachment

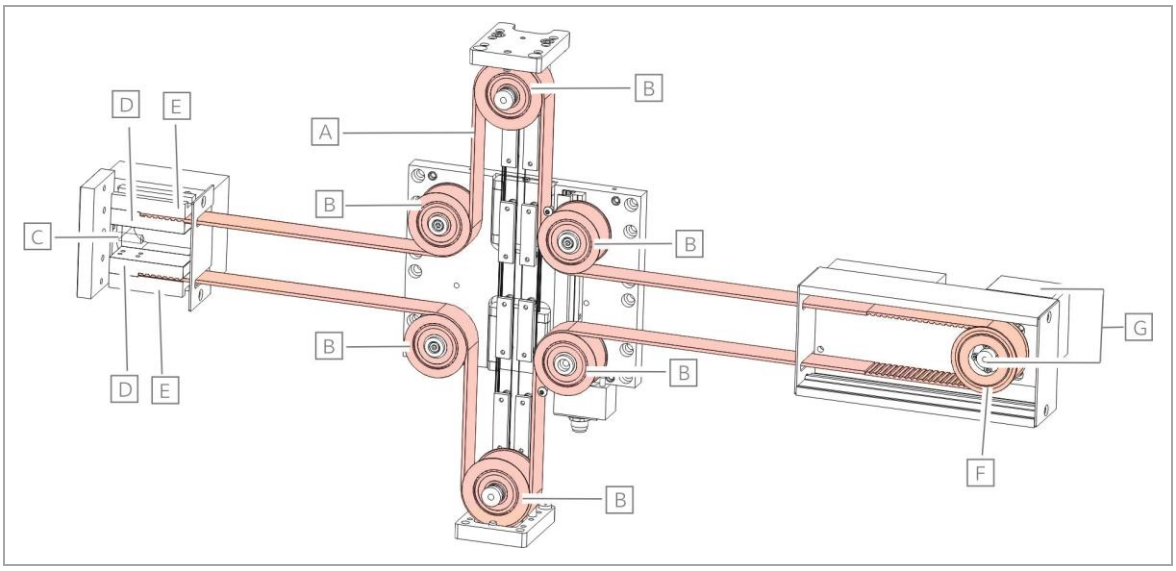

Figure 8 Overview main assemblies module 60/33 (design ZOM) (figure 2 of 2)

A Toothed belt
B Deflector rollers
C Clamping block
D Belt receptacle
E Counterpiece belt tensioner
F Toothed disc with clamping set
G Planetary gear

Generated by: Frank Reichelt | MAN_EN_1145680_Module60-33_R1a.doc

5 Assembly Instructions

5.1 Installation Position

The linear unit module 60/33 is primarily intended for vertical use.

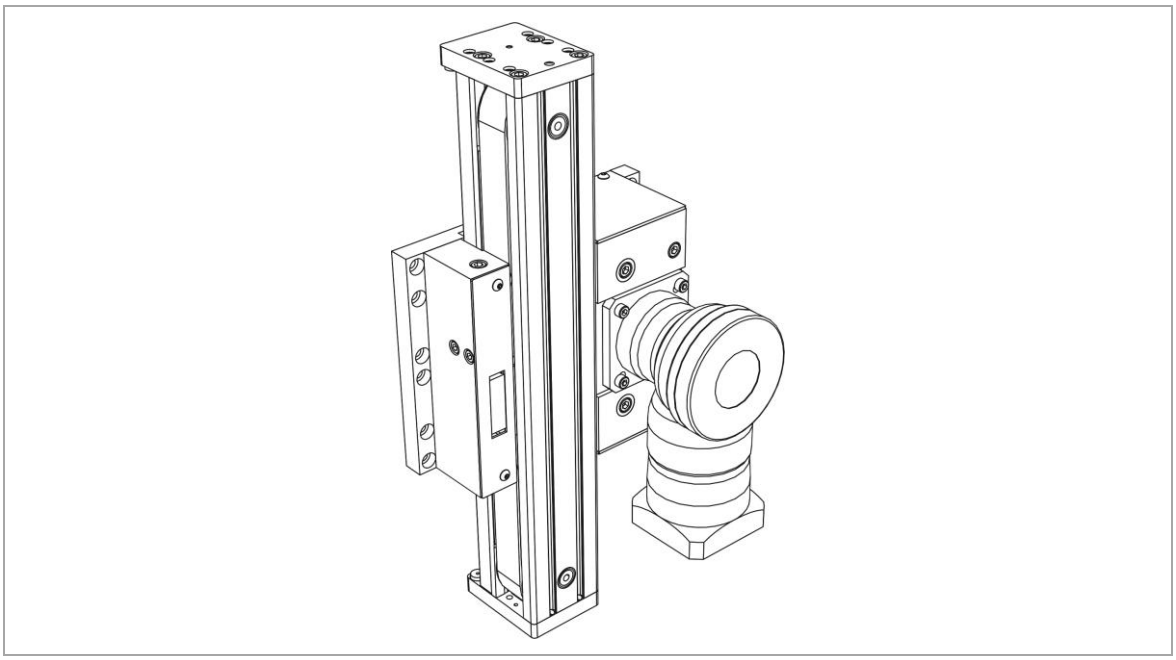

Figure 9 Module 60/33 vertical use

At horizontal use, the torque load on the ball bearings should not get too high.

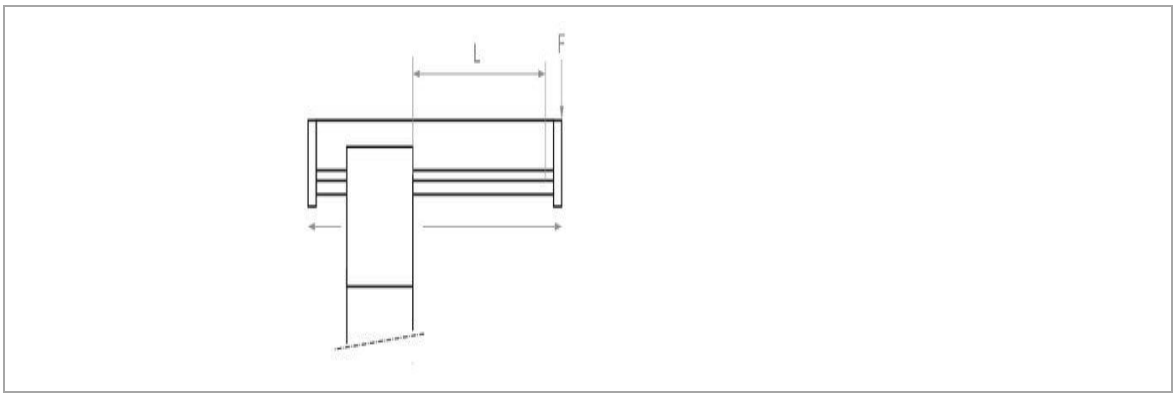

Figure 10 Module 60/33 horizontal use under observation of the torque load

Load table

Force [F]	547	188	106	67	43	26
Length [mm]	100	280	460	640	820	1000

Generated by: Frank Reichelt | MAN_EN_1145680_Module60-33_R1a.doc

The linear unit module 60/33 ZOM is also primarily intended for vertical use.

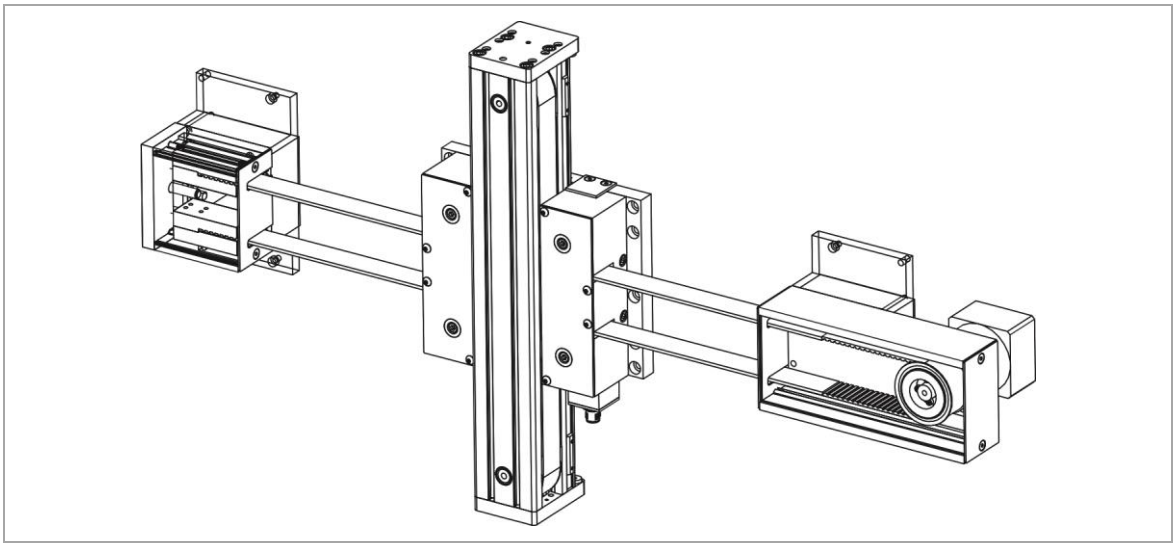

Figure 11 Module 60/33 ZOM vertical use

5.2 Description of the drive concept (pulley principle)

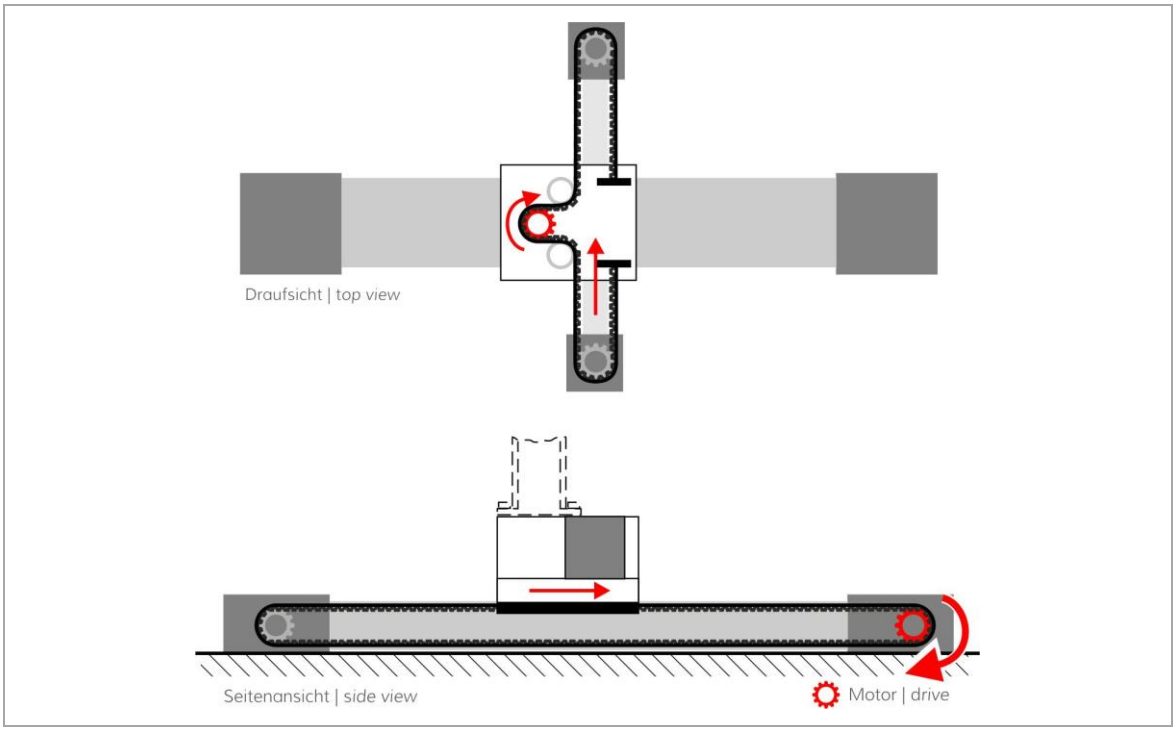

Figure 12 Module 60/33 running direction clockwise

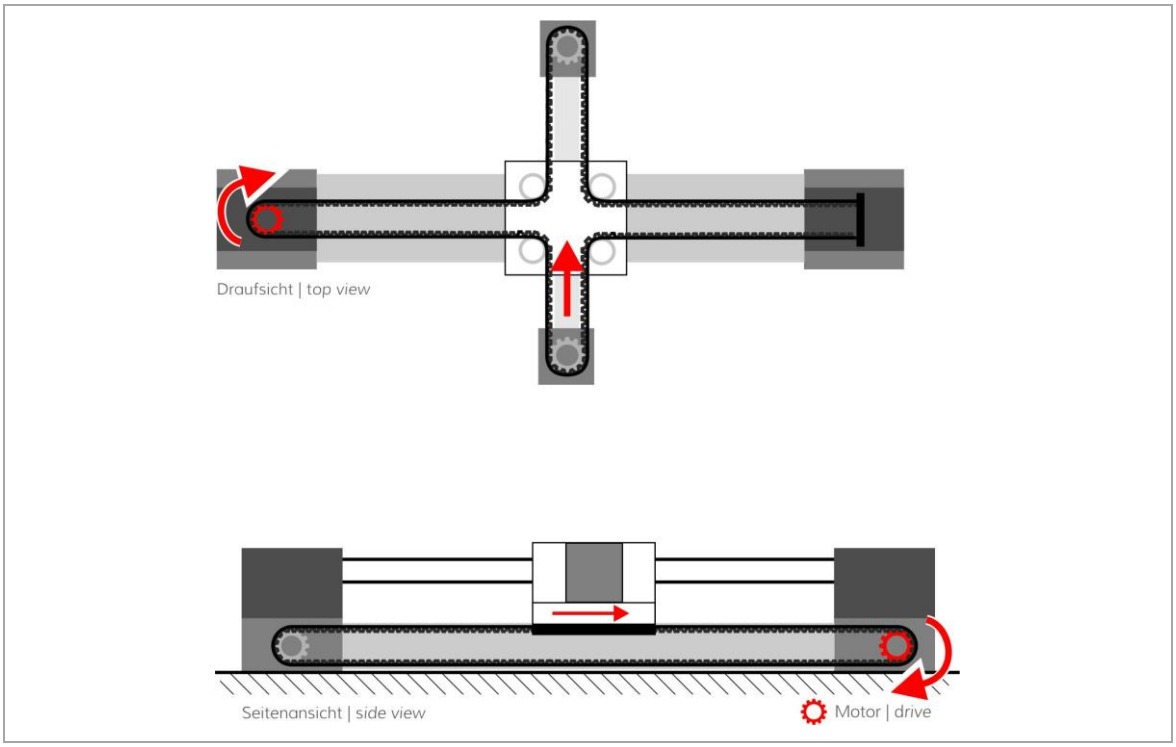

Figure 13 Module 60/33 ZOM running direction clockwise

Generated by: Frank Reichelt | MAN_EN_1145680_Module60-33_R1a.doc

5.3 Cross installation

The cross installation of module 60/33 or module 60/33 ZOM with module 115/42 or module 160/15 is possible without any further plates or adapters.

A mirrored placement or placement turned by 180° is possible as well.

Examples:

- Transverse-installation module 60/33 with module 160/15
- Transverse installation module 60/33 ZOM with module 160/15

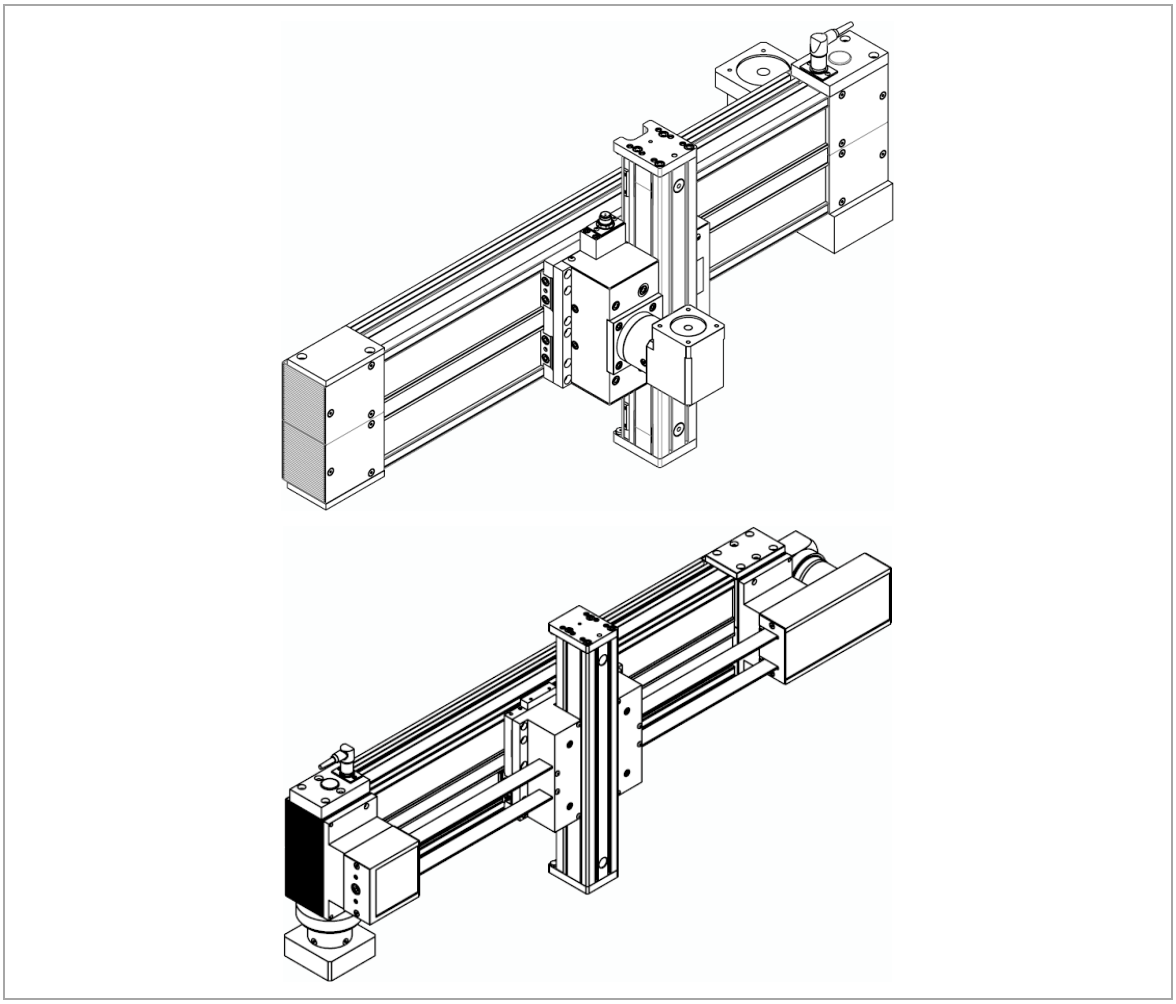

Figure 14 Cross installation (module 60/33 and module 60/33 ZOM) with module 160/15

Generated by: Frank Reichelt | MAN_EN_1145680_Module60-33_R1a.doc

5.4 Attachment

5.4.1 Standard design module 60/33

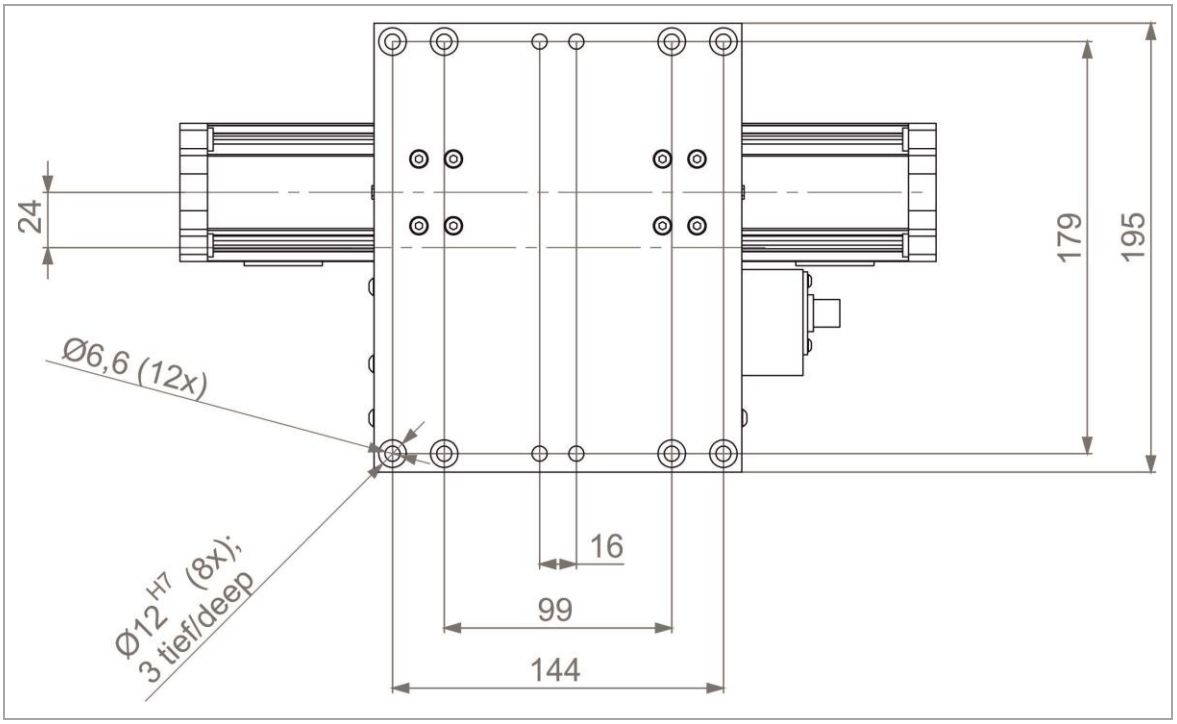

Figure 15 Attachment of module 60/33 standard design

Generated by: Frank Reichelt | MAN_EN_1145680_Module60-33_R1a.doc

5.4.2 Module 60/33 ZOM

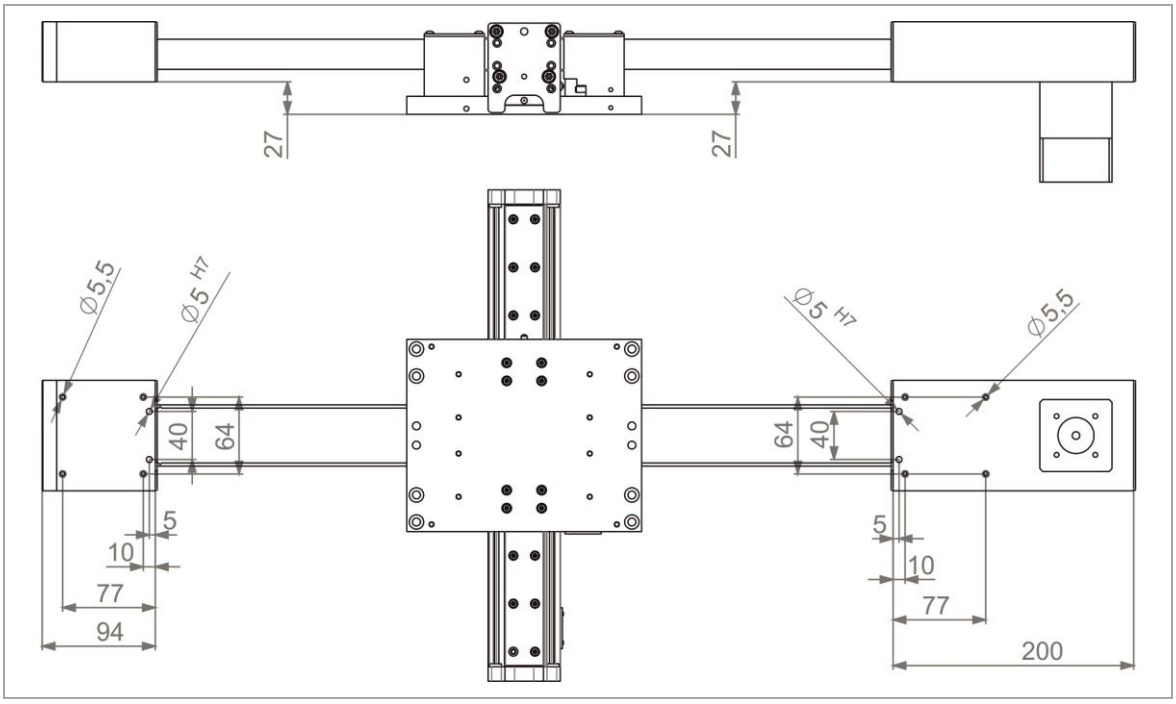

Figure 16 Attachment of module 60/33 ZOM-design (stand alone)

5.4.3 Module 60/33 ZOM with adapter for cross-installation

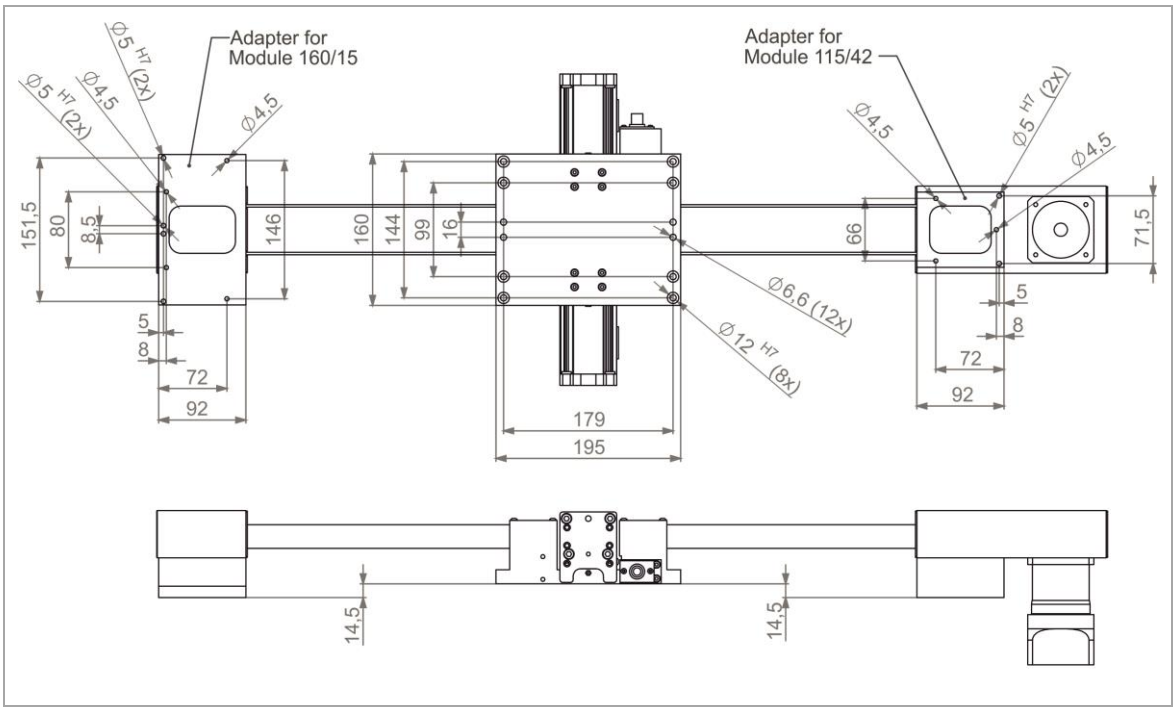

Figure 17 Attachment of module 60/33 ZOM design (with adapter for accessory)

Generated by: Frank Reichelt | MAN_EN_1145680_Module60-33_R1a.doc

5.4.4 Installation of Actuators

The actuators (cylinders, pick-up modules, etc.) that are to be installed on the linear unit can be attached via the drilling pattern on the end plate.

When using accessory units such as rotary tables, special end plates are used and the attachment option of the accessory unit applies.

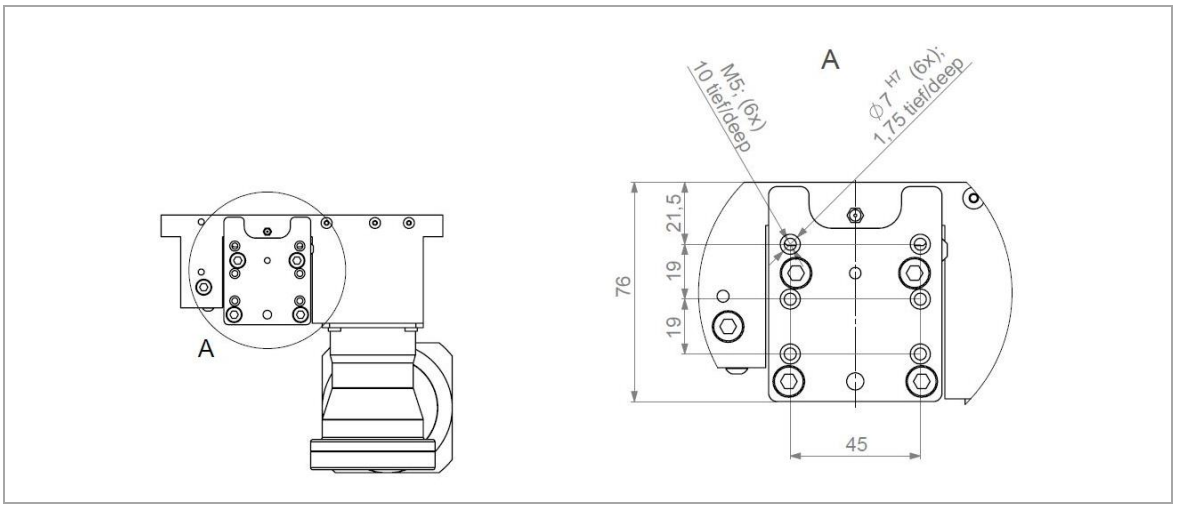

Figure 18 Installation of Actuators

Generated by: Frank Reichelt | MAN_EN_1145680_Module60-33_R1a.doc

5.5 Motor attachment versions and gear types

Generally, four different designs of planetary gear types are available.
Both motors by IEF-Werner GmbH and customer-specific motors can be attached to these gears.

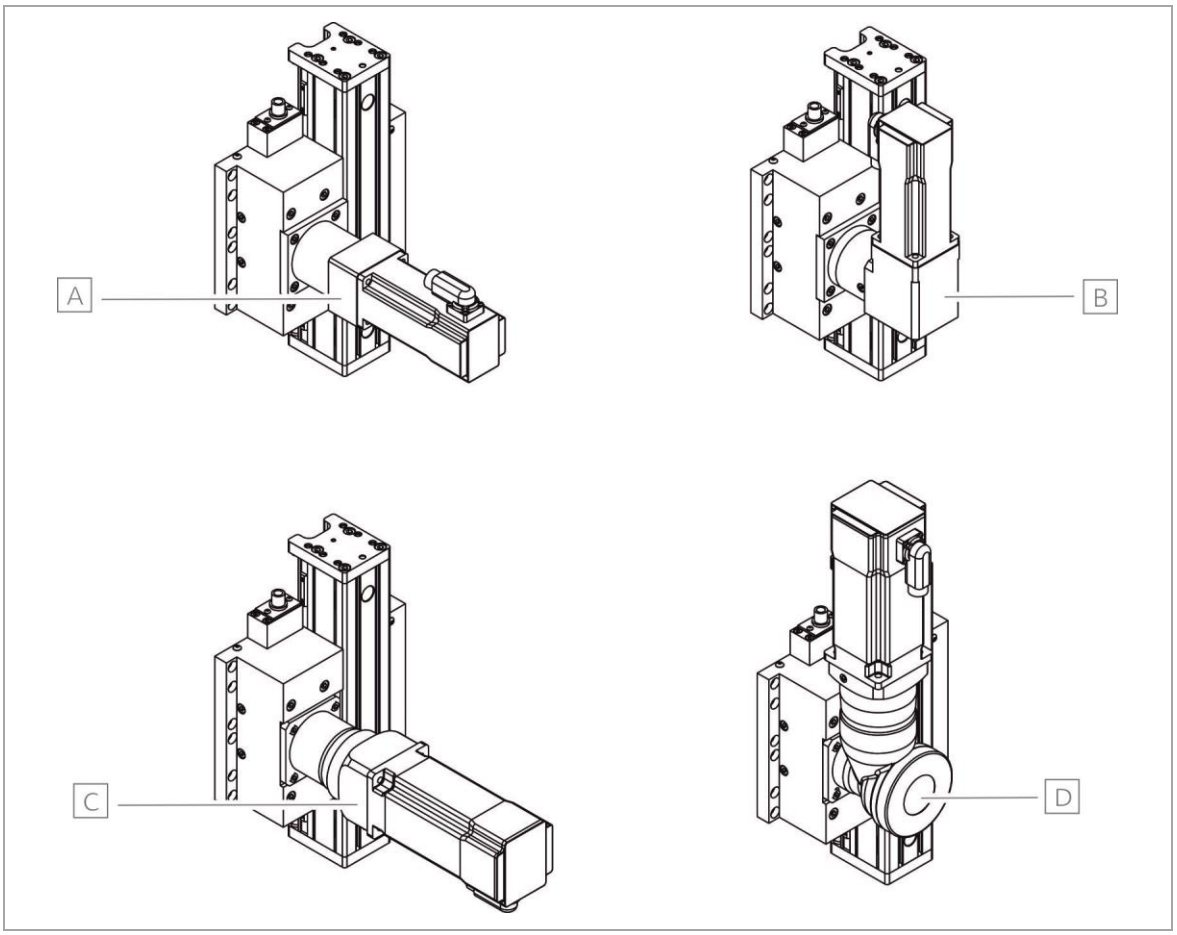

Figure 19 Overview motor attachment versions with gear types

A Gear type: PLE60
B Gear type: WPLE 60
C Gear type: PLN70
D Gear type: WPLN 70

Generated by: Frank Reichelt | MAN_EN_1145680_Module60-33_R1a.doc

5.6 Accessories

5.6.1 Mechanical stop

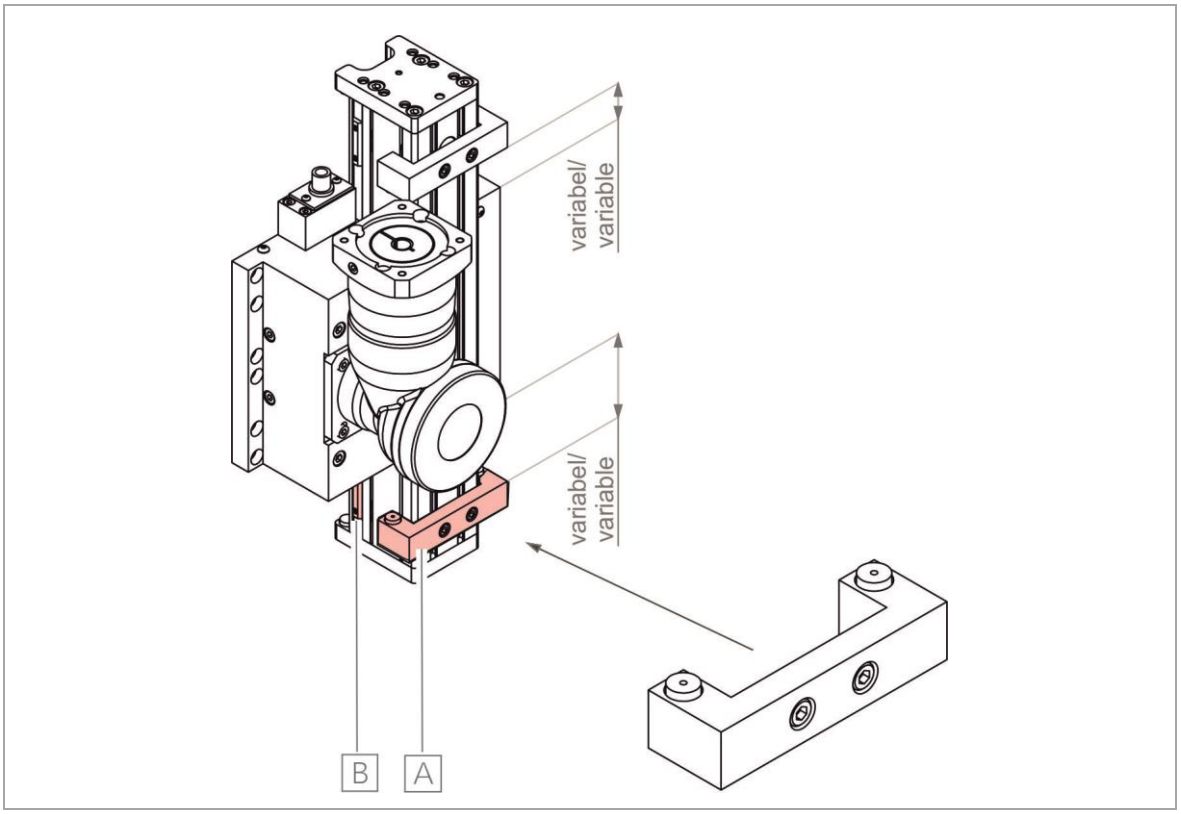

Figure 20 Module 60/33 with mechanical stop

A Mechanical stop

B Attachment with slot nut (article no. 1024461)

Generated by: Frank Reichelt | MAN_EN_1145680_Module60-33_R1a.doc

5.7 Wiring

5.7.1 Initiators

Inductive proximity switches (NC normally closed contacts, article no.: 25165) are available optionally for the running path (see Figure 22, page 29).

These switches are no safety limit switches purs. to DIN EN 60204-1:2014-10 (Safety of machinery - electrical equipment of machinery - part 1: general requirements).

Optionally, an additional reference point switch (PNP normally open contacts, article no.: 726744, see Figure 23, 29), can be installed in module 60/33 (also subsequently).

The active button is marked with a coloured circle. Normally closed contacts are marked with a green, normally open contact with a red dot.

The initiators and their supply lines are protected in an integrated cable channel, and are wired to a joint plug.

The initiator can be replaced by moving the strip in the lifting direction.

The switching position can be set at any time by moving the slot nuts.

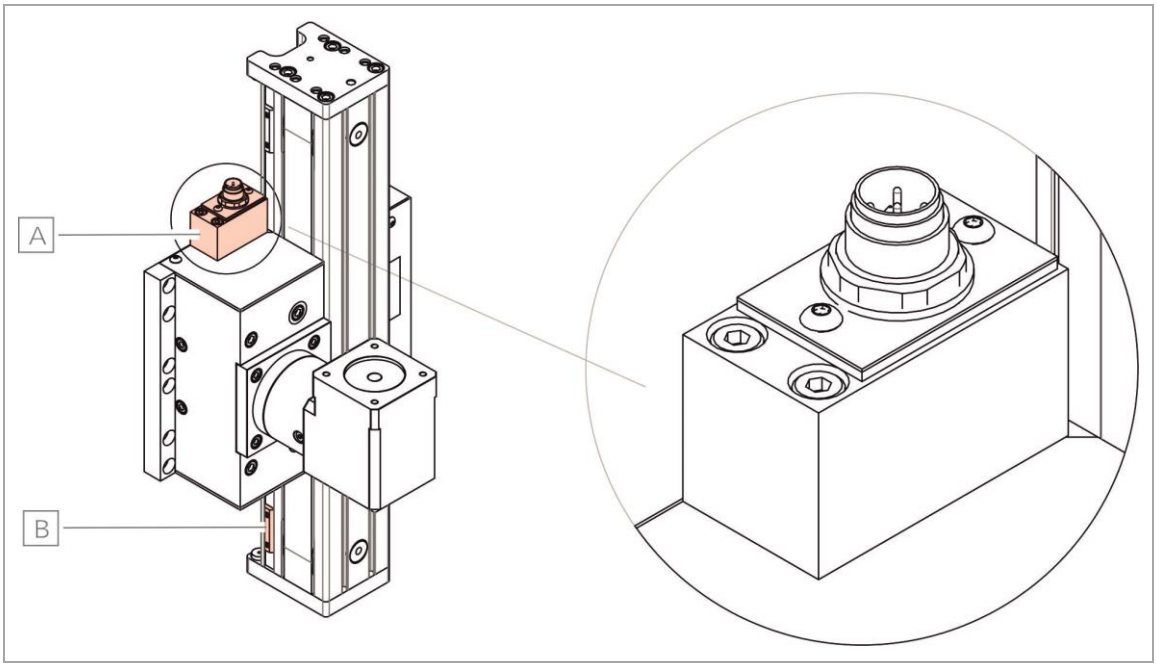

Figure 21 View of plug at module 60/33

A Plug housing and plug for initiators

B Slot nut

Generated by: Frank Reichelt | MAN_EN_1145680_Module60-33_R1a.doc

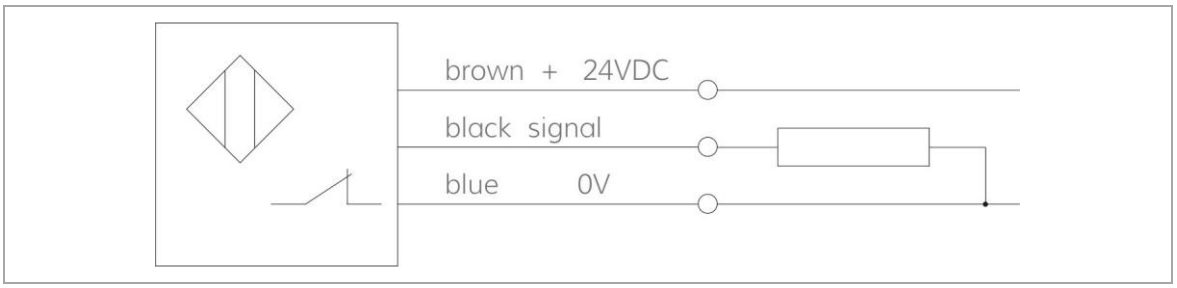

Figure 22 Connection assignment NC-normally closed

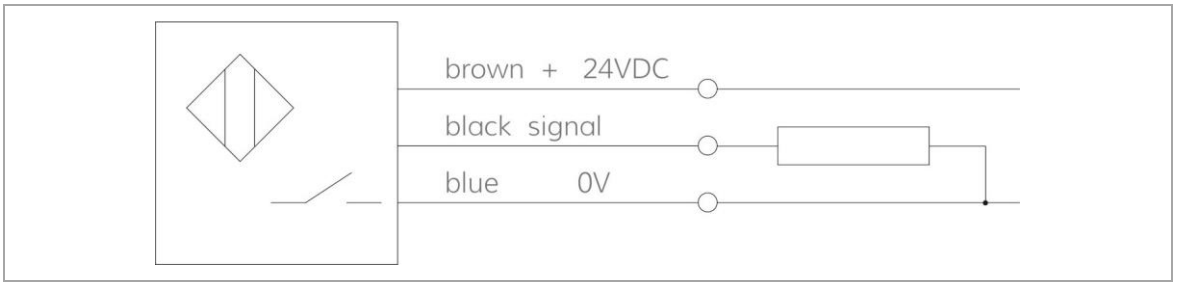

Figure 23 Connection assignment NO-normally open

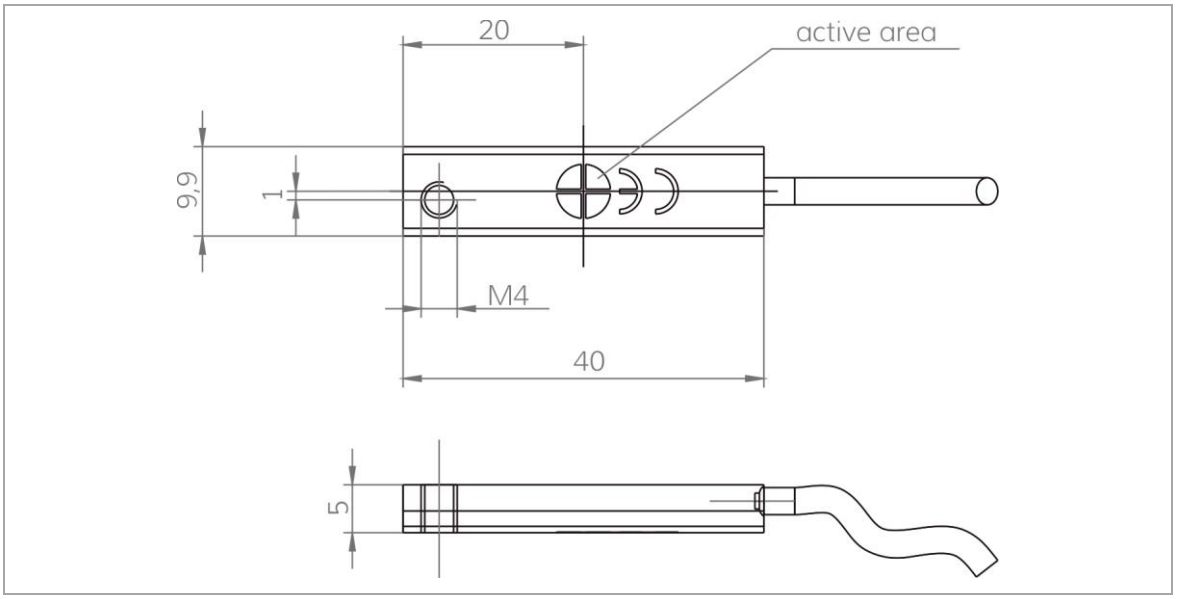

Figure 24 Scaled sketch of inductive proximity switch

Generated by: Frank Reichelt | MAN_EN_1145680_Module60-33_R1a.doc

5.7.2 Limit switches

Plug assignment for M12-plug:

Pin-No.	Assignment	IEF-Werner cable
1	+ 24 V	brown
2	Limit switch negative direction	green
3	0 V	white
4	Limit switch positive direction	yellow
5	Reference switch	grey

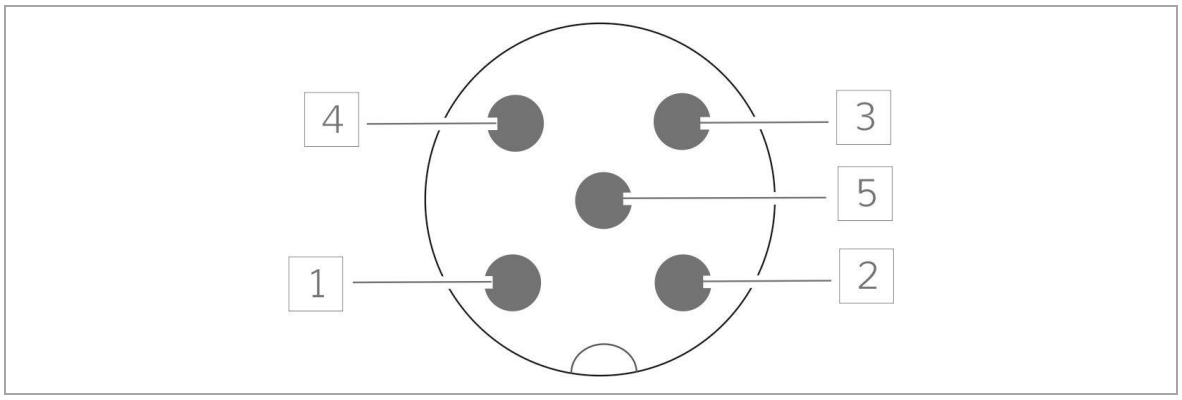

Figure 25 Plug assignment M12-plug for reference and limit switch

Generated by: Frank Reichelt | MAN_EN_1145680_Module60-33_R1a.doc

Plug assignment for IEF standard plug (optional):

Pin-No.	Assignment	IEF-Werner cable
1	+ 24 V	brown
2	Limit switch negative direction	green
3	0 V	white
4	Limit switch positive direction	yellow
5	Reference switch	grey

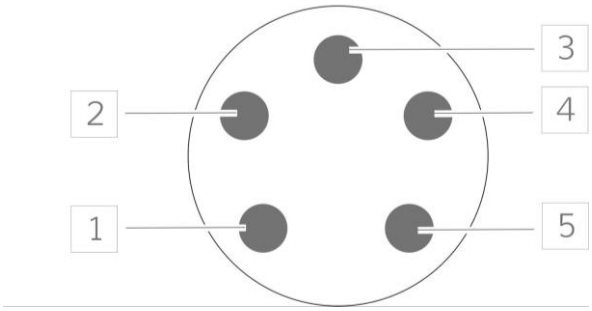

Figure 26 Plug assignment IEF standard plug for reference and limit switch

Generated by: Frank Reichelt | MAN_EN_1145680_Module60-33_R1a.doc

5.7.3 Technical Data of Initiators

Parameter	Value
Operating voltage incl. residual ripple	(10 ... 30) VDC ≤ 15 %
Current load capacity	Ia ≤ 200 mA
Voltage drop at Ia max.	≤ 2.5 V
Switching frequency	≤ 1000 Hz
Own current consumption	≤ 15 mA
Nominal switching distance on steel	1.5 mm ± 10 %
Switching hysteresis	(3 ... 20) %
Reproducibility (U = const.)	± 0.01 mm
Operating temperature	- 25 °C ... + 70 °C
Protection class	IP 65
Short-circuit proof	yes
Protected against polarity reversal	yes

5.7.4 Cable Routing

For all moving cables, suitable cable routing has to be used to effectively prevent cable breaks. The minimum radius r_{min} for cable routing chains is calculated for IEF-Werner cables according to the following formula:

$$r_{min} \geq 10 \text{ x cable diameter}$$

When different cables are used, EN 60204 must be observed. In addition, it must be ensured that a space reserve of 30% is kept free within the routing chains. A strain relief for the cables has to be attached at the outlet of the cable routing chain.

We recommend purchasing genuine cables and energy chains from IEF-Werner GmbH.
Please contact us. We will gladly advise you.

Generated by: Frank Reichelt | MAN_EN_1145680_Module60-33_R1a.doc

5.8 Technical Data

5.8.1 Tightening Torques for Screw Connection [Nm]

Strength class	M2.5	M3	M4	M5	M6	M8
8.8	0.5	1.28	2.7	5.5	9.5	23

5.8.2 Technical Data of the Linear Unit

	Module 60/33 TG1002894	Module 60/33 ZOM TG1003181
Length L	329 mm, 369 mm, 409 mm‰1329 mm	
Lift (lift steps 40 mm)	(100 - 1100) mm	
Total weight at stroke 100 mm (without motor and gearbox)	7 kg	8 kg
including moved mass at stroke 100 mm (without motor and	3.07 kg	
Weight increase per 40 mm stroke	0.24kg/40 mm	
Maximum movement speed (depending on load and gearbox)	2.2 m/s	
Repeat accuracy	+/- 0.05 mm	
Toothed belt width	25 mm / AT5	
Rope pull resistance toothed belt	2 x 1750 N	
Tearing force toothed belt	2 x 4000 N	
Geometrical moment of inertia of the basic body		
Ix	426,000 mm^4	
Iy	451,000 mm^4	
Infeed constant without gear	75 mm/turn	80 mm/turn
Standard reduction planetary gear	3:1, 4:1, 5:1, 7:1, 8:1, 10:1	
Recommended max. load in vertical operation (depending on stroke, motor and gearbox)	15 kg	
Cross Installation to	module 160/15; module 115/42	
Basic moment of friction	0.25 Nm	

Generated by: Frank Reichelt | MAN_EN_1145680_Module60-33_R1a.doc

5.8.3 Type Label

The type label is attached in the following positions:

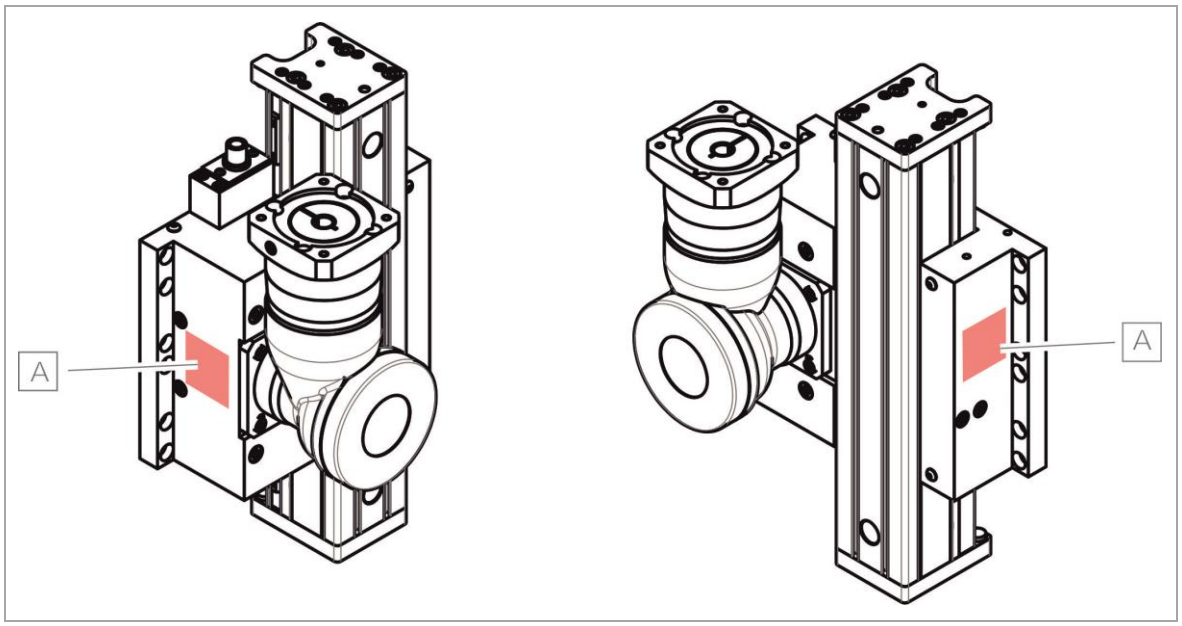

Figure 27 Positions of the type label at the module 60/33

A Type Label

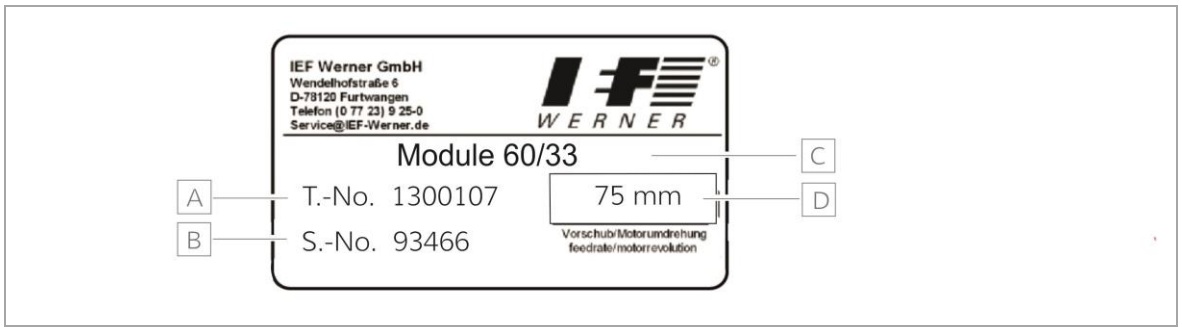

Figure 28 Type label (standard design)

A Part number
B Serial number
C Type destination
D Feed constant/motor turn

Generated by: Frank Reichelt | MAN_EN_1145680_Module60-33_R1a.doc

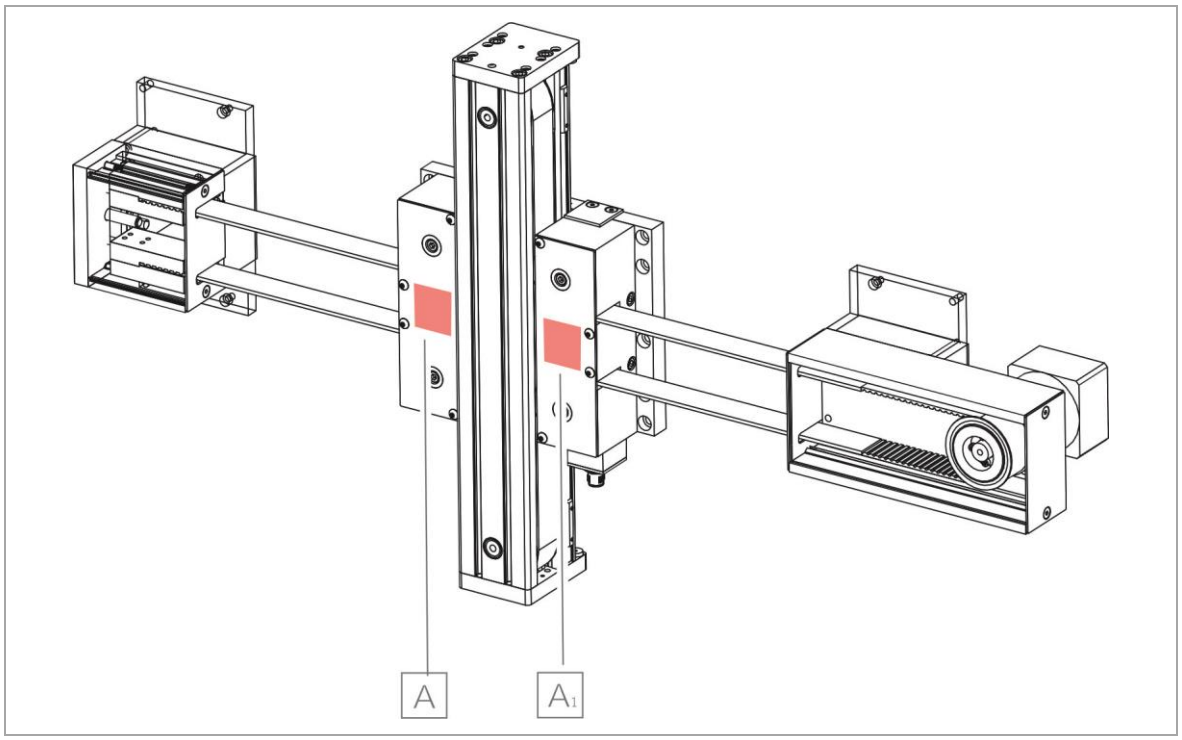

Figure 29 Positions of the rating plates for the module 60/33

A Type label (right) or: →

A1 Type label (left)

Figure 30 Type label (ZOM design)

A Part number

B Serial number

C Type destination

D Feed constant/motor turn

Generated by: Frank Reichelt | MAN_EN_1145680_Module60-33_R1a.doc

6 Maintenance

CAUTION

Any repairs must only be performed by specialist personnel who have read and understood these original operating instructions.
Only use genuine spare parts, since IEF-Werner GmbH will not assume any warranty otherwise.

6.1 Lubrication of Guide Carriage

The guide carriages are equipped with long-time lubrication for a running output or 1000 km in the factory. We recommend regularly relubricating the guide carriage after this.

Relubrication takes place by a manual surge press (IEF-Werner item no.: 1055123) using two lubrication nipples attached to the guide carriage.

Lubricant Dynalub 510 must be used.

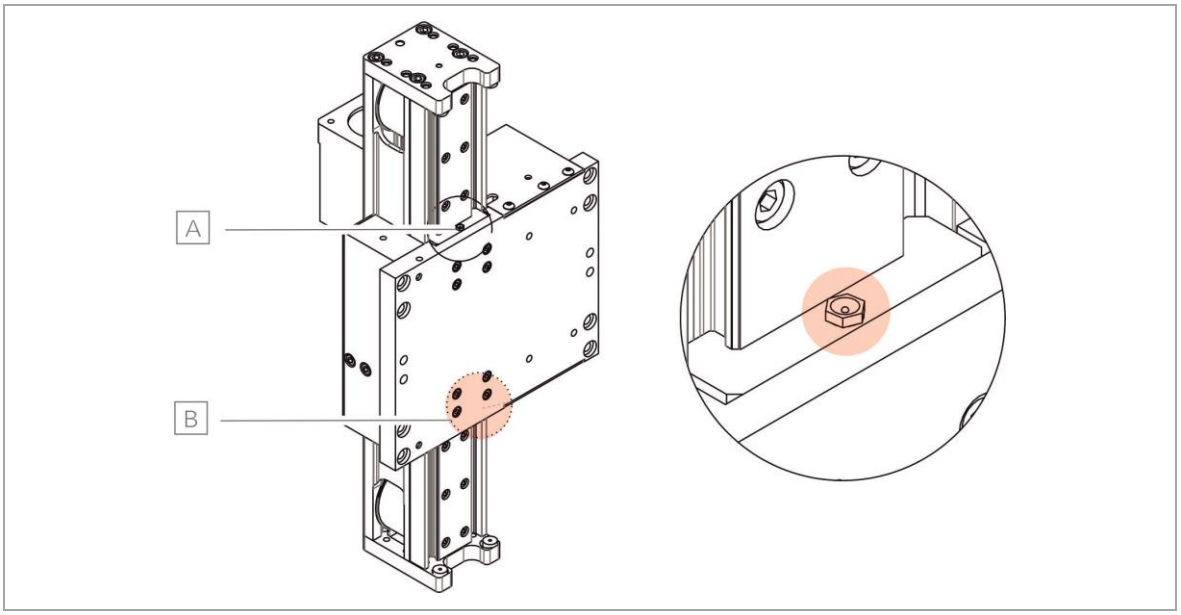

Figure 31 Lubrication nipple

A Lubrication nipple

B Lubrication nipple (concealed here)

Generated by: Frank Reichelt | MAN_EN_1145680_Module60-33_R1a.doc

7 Troubleshooting

Interference	Reason	Correction
Increased running noise	Nominal service life of guide carriage exceeded	Complete exchange of the guide carriages
	Torque load on guide carriage too high, causing play in the guide carriage	Complete exchange of the guide carriages; reduce load if necessary
	Guide carriage worn from strong contamination	Replace all guide carriages, clean guide rails and relubricate
	Guide rails worn	Replace guide rails, replace all guide carriages, check load, protect linear module from strong contamination
	Belt tension too high	Relieve belt a little
	Belt contaminated or run in	Clean belt, replace if necessary
	Sprocket run in	Replace sprocket
	Bearing of the deflector roller defective	Replace deflector roller with bearing
	Motor or gearbox aligned incorrectly	Align motor or gearbox
	Gearbox or counter-bearing of the gearbox sprocket defective	Replace gearbox or counter-bearing
Linear drive unit does not move	Limit switch cable not connected	Connect the cable
	Limit switch defective	Replace limit switch
	Limit switch cable defective	Check or replace the limit switch cable
	Motor connected incorrectly	Check and change connector assignment, if required
	Motor defective	Replace motor
	Plugs loose	Check plug connections
	Motor cable defective	Check motor cable, replace cable, if required.
	Toothed disc slips through	Engage clamp set tightly and secure screws with threadlocker.

Generated by: Frank Reichelt | MAN_EN_1145680_Module60-33_R1a.doc

Interference	Reason	Correction
Linear drive unit does not move (continued)	Guide carriage defective (stiffness, block)	Replacement of the guide carriages, if required of the guide rail
	For motor with brake: Brake does not disengage	Apply current to the brake, if the brake still does not open, replace motor
	Error in power electronics or control unit	Check components, replace if necessary
Position loss/reverse play	Belt tension too low	Tension belt, replace if necessary
	Toothed disc slips through	Engage clamp set tightly and secure screws with threadlocker.
Linear drive unit moves mechanically against the stop during the reference run	Incorrect direction of rotation	Change motor direction of rotation
	Broken motor cable	Replace cable
	Reference switch or cable defective	Replace reference switch or cable
	Slot nut slipped or lost	Set grooves or install anew

Generated by: Frank Reichelt | MAN_EN_1145680_Module60-33_R1a.doc

8 Repair

⚠ WARNING

Warning of dangerous electrical voltage.

The system must be powered down for all assembly, disassembly or repair work.
Non-observance of the safety provisions may cause death.

CAUTION

Any repairs must only be performed by specialist personnel who have read and understood these original operating instructions.
Only use genuine spare parts, since IEF-Werner GmbH will not assume any warranty otherwise.

8.1 Factory-setting of the toothed belt tension

The toothed belt tension is correctly set in the factory before delivery.

Note: Do not remove the threadlocker from the adjustment screws.

Generated by: Frank Reichelt | MAN_EN_1145680_Module60-33_R1a.doc

8.2 Replace toothed belt

8.2.1 Module 60/33

⚠ ATTENTION

The linear unit must be supported at vertical attachment or secured by a stopper (article no. 1128721) so that the linear unit does not fall off when loosening the toothed belt.

You may also put the linear unit into a horizontal position (e.g. by disassembly).

Release the damaged toothed belt

(1) Relieve the toothed belt (see [A] in Figure 32, 43) by loosening the clamping screw [E].
(2) Disassemble cover [B].
(3) Release the belt fastener [C].
(4) Disassemble gear with motor [D].
(5) Pull out defective toothed belt [A].
(6) Check further moving parts for wear and function, replace if necessary.

Insert new toothed belt

(1) Thread in toothed belt anew - guide the toothed belt with a flat screwdriver at the height of the end plates.
(2) Assemble gear with motor [D].
(3) Re-install the belt fastener [C].
(4) Tension toothed belt; tighten clamping screw [E] to the stop again. The sleeve [F] specifies the clamping path.
(5) Before and during clamping of the toothed belt, ensure that the teeth of the belt interlock with the grooves of the sprocket.
(6) Check smooth operation and noise.
(7) Re-install cover [B].
(8) Remove the support of the linear unit.
(9) Perform reference run and check axis position; adjust if necessary.

Generated by: Frank Reichelt | MAN_EN_1145680_Module60-33_R1a.doc

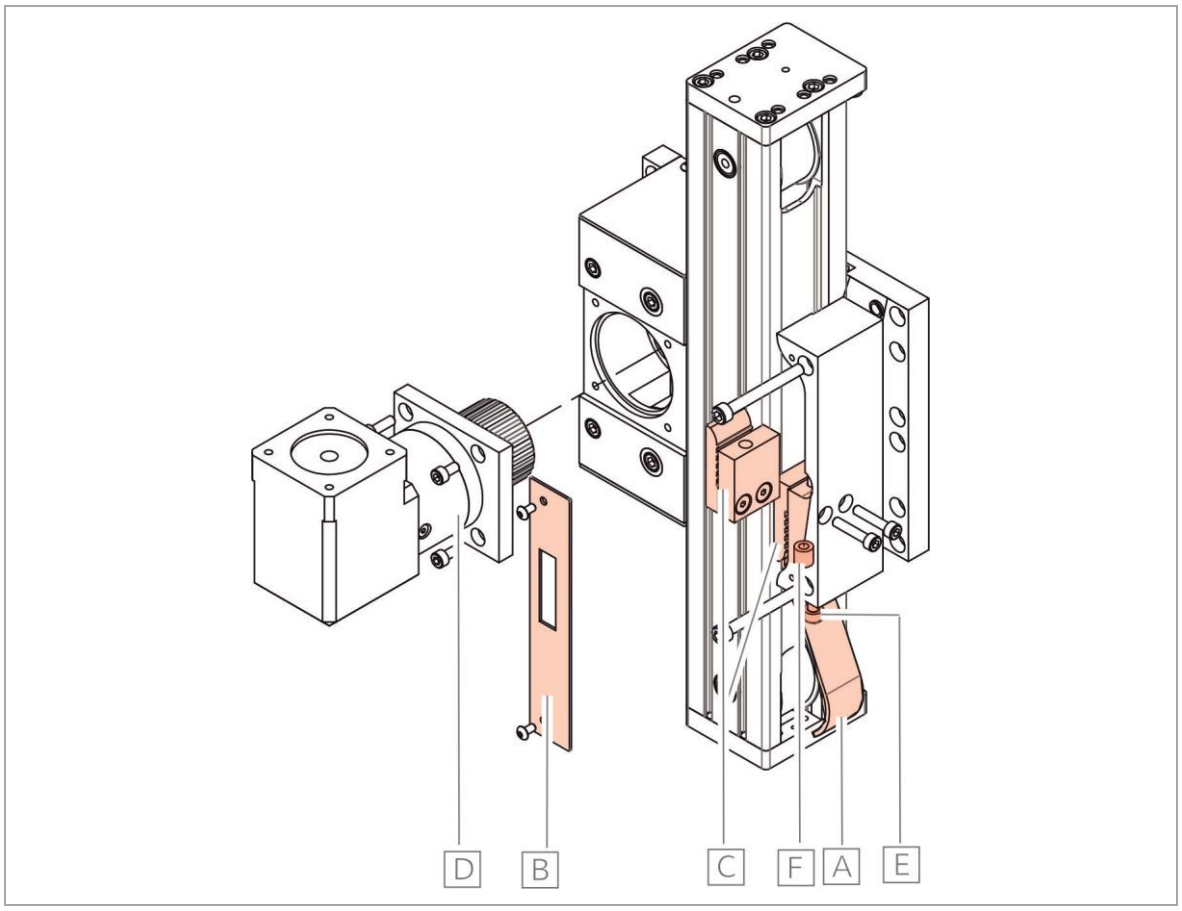

Figure 32 Toothed belt change at the module 60/33

A Toothed belt
B Cover
C Belt fastener
D Gearbox with motor
E M5-clamping screws
F Sleeve

Generated by: Frank Reichelt | MAN_EN_1145680_Module60-33_R1a.doc

8.2.2 Module 60/33 ZOM

⚠ ATTENTION

The linear unit must be supported at vertical attachment or secured by a stopper (article no. 1128721) so that the linear unit does not fall off when loosening the toothed belt.

You may also put the linear unit into a horizontal position (e.g. by disassembly).

Release the damaged toothed belt

(1) Release the toothed belt (see [A] in Figure 33, 45) (loosen clamping screw [F]; do not change the counter-thread pins [E]).
(2) Remove the total of four covers [B].
(3) Release the belt fastener [C].
(4) Pull out defective toothed belt.
(5) Check further moving parts for wear and function, replace if necessary.
(6) Release housing with deflector rollers [D].

Insert new toothed belt

(1) Thread in toothed belt anew - guide the toothed belt with a flat screwdriver at the height of the end plates.
(2) Install housing with deflector rollers [D] again and align it.
(3) Install the belt fastener [C].
(4) Tension the toothed belt.
(5) Before and during clamping of the toothed belt, ensure that the teeth of the belt interlock with the grooves of the sprocket.
(6) Tighten clamping screw [F] to the stop again. The counter-thread pins [E] specify the clamping path.
(7) Check smooth operation and noise.
(8) Assemble covers [B].
(9) Remove the support of the linear unit.
(10) Perform reference run and check axis position; adjust if necessary.

Generated by: Frank Reichelt | MAN_EN_1145680_Module60-33_R1a.doc

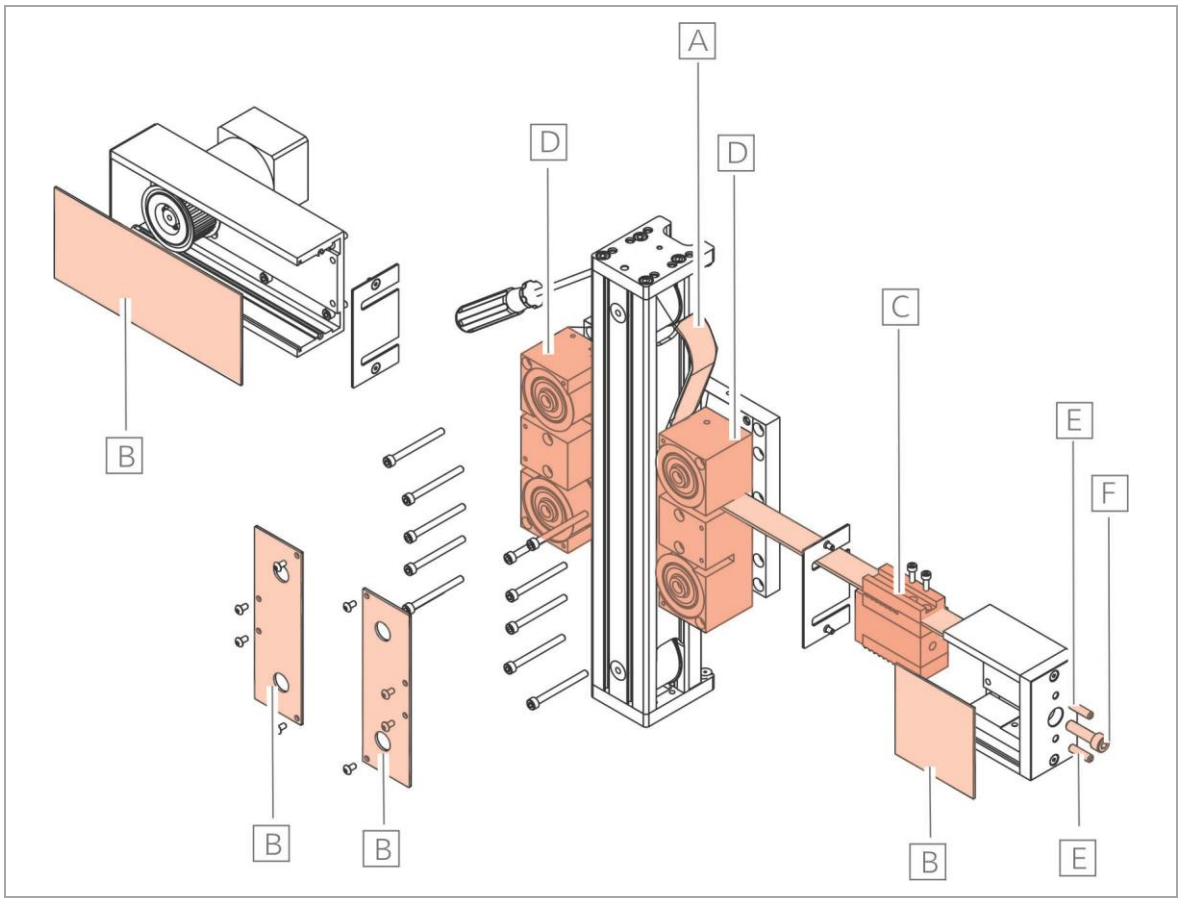

Figure 33 Toothed belt change at the module 60/33 ZOM

A Toothed belt
B Cover (4x)
C Belt fastener
D Housing with deflector rollers (4x)
E Counter-thread pins (2x)
F M8-clamping screws

Generated by: Frank Reichelt | MAN_EN_1145680_Module60-33_R1a.doc

8.3 Exchange guide carriages / guide rail

8.3.1 Exchange guide carriages module 60/33

⚠ ATTENTION

The linear unit must be supported at vertical attachment or secured by a stopper (article no. 1128721) so that the linear unit does not fall off when loosening the toothed belt.

You may also put the linear unit into a horizontal position (e.g. by disassembly).

Remove the defective guide carriage and toothed belt

(1) Relieve toothed belt.
(2) Disassemble cover (see [A] in Figure 34, 47) the bracket plate [C].
(3) Release and remove the belt buckle [B].
(4) Remove the bracket plate [C] to take out the toothed belt.
(5) Disassemble one of the two end plates [D].
(6) Remove the screws for guide carriage [E] and push the guide carriage off of the guides.
(7) Clean the guide rail and check it for wear or damage; grease it or replace it if necessary.
(8) Check further moving parts for wear and function, replace if necessary.

CAUTION

The guide carriages must only be installed at the adapter plate with the guide rail installed.

Observe reference side (see Figure 36, 50).

Generated by: Frank Reichelt | MAN_EN_1145680_Module60-33_R1a.doc

Insert new guide carriages and toothed belts

(1) Push (if appl. new) guide carriage (see [E] in Figure 34, bottom) onto the guide rail.

(2) The ground surface of the guide carriages [E] is the reference surface and applied to the adapter plate (see Figure 36, 50).

The placement does not matter for the guide rail. Push the guide rail against the step of the basic body during installation.

(3) The lubrication nipples [F] of the guide carriage [E] should be on the outside (re-equip if necessary).

(4) When tightening the screws, push the guide carriages [E] against the reference side with the entire basic body.

(5) Check the guide system for smooth operation.

(6) Install the cover of the bracket plate [A] and end plate [D] again.

(7) Assemble the belt fastener [B] .

(8) Tension the toothed belt until the belt fastener [B] is flush with the sleeve.
Before and during clamping of the toothed belt, ensure that the teeth of the belt interlock with the grooves of the sprocket.

(9) Check smooth operation and noise development again and remove support from the linear unit.

(10) Perform reference run and check axis position; adjust if necessary.

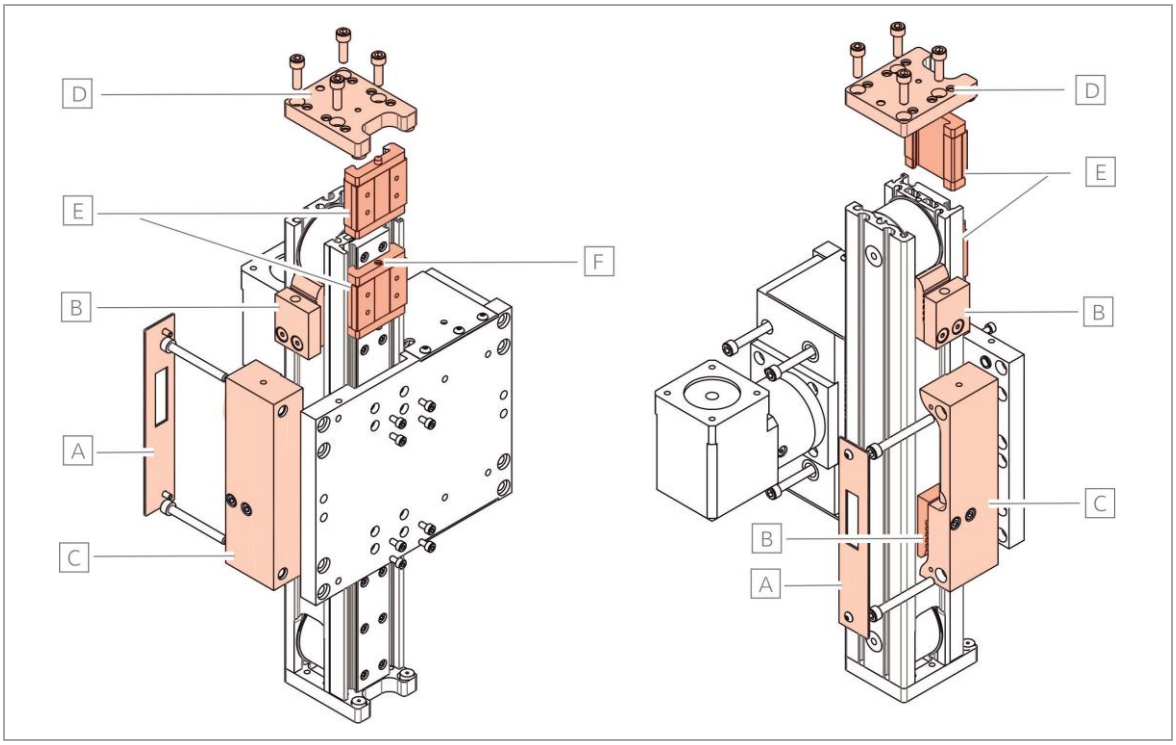

Figure 34 Exchange guide carriages/guide rail/toothed belt(module 60/33)

A Cover
B Belt fastener
C Bracket plate
D End-plate
E Guide carriage
F Lubrication nipple

Generated by: Frank Reichelt | MAN_EN_1145680_Module60-33_R1a.doc

8.3.2 Exchange guide carriages module 60/33 ZOM

⚠ ATTENTION

The linear unit must be supported at vertical attachment or secured by a stopper (article no. 1128721) so that the linear unit does not fall off when loosening the toothed belt.

You may also put the linear unit into a horizontal position (e.g. by disassembly).

Remove the defective guide carriage and toothed belt:

(1) Mark position of the belt fastener (see [A] in Figure 35, 49) and clamping screw [B] (remember).
(2) Relieve toothed belt, but do not misadjust the two counter-thread pins [C].
(3) Disassemble covering parts [D].
(4) Release and remove the belt fastener [A].
(5) Disassemble one of the two end plates [E].
(6) Disassemble the screws [F] for deflector rollers [H] .
(7) Remove screws [G].
(8) Remove the basic body [K] at the same time as the deflector rollers [H].
If the deflector rollers [H] cannot be moved axially easily, disassemble the deflector housing [I] together with deflector rollers [H].
(9) Push the guide carriages [J] from the guide.
(10) Clean the guide rail and check it for wear or damage; grease it and replace it if necessary.
(11) Check further moving parts for wear and function, replace if necessary.
(12) Place the guide carriage [J] on the guide rail.

CAUTION

The guide carriages must only be installed at the adapter plate with the guide rail installed.

Observe reference side (see Figure 37, 51).

Insert new guide carriage and toothed belt

(1) The ground surface of the guide carriages [J] is the reference surface (see Figure 37, 51) and applied to the adapter plate.
The placement does not matter for the guide rail. Push the guide rail against the step of the basic body during installation.
(2) The lubrication nipples [L] are placed on the outside (retrofit if necessary).
(3) When tightening the screws [G], push the guide carriages [J] against the reference side with the entire basic body [K].
(4) Check the guide system for smooth operation.
(5) Install deflector rollers [H] and end plates [E].
(6) Assemble the belt fastener [A].

Generated by: Frank Reichelt | MAN_EN_1145680_Module60-33_R1a.doc

(7) Check smooth operation and noise.

(8) Assemble covering parts [D].

(9) Tension the toothed belts until the belt fastener [A] are flush with the counter-thread pins [C]. To check: The tensioning path is 0.4 mm/m and corresponds to a 120°-turn of the M8-clamping screw [B] per 1 m belt length.

Before and during clamping of the toothed belt, ensure that the teeth of the belt interlock with the grooves of the sprocket.

(10) Perform reference run and check axis position; adjust if necessary.

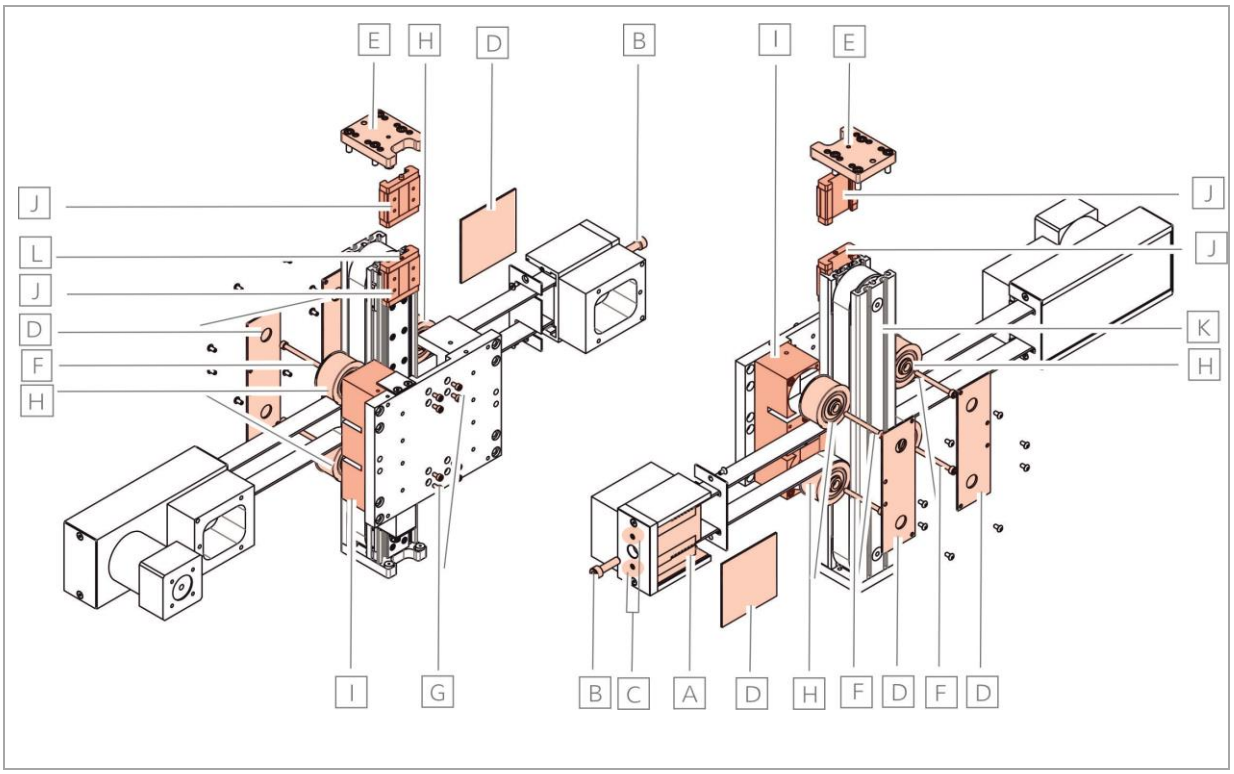

Figure 35 Exchange guide carriages/guide rail/toothed belt(module 60/33 ZOM)

A Belt fastener
B M8-clamping screws
C Counter-thread pins (2x)
D Cover parts (3x)
E End-plate
F Attachment screws for deflector rollers (4x)
G Screws for guide carriage
H Deflector rollers (4x)
I Deflector housing
J Guide carriage (2x)
K Basic body
L Lubrication nipple

Generated by: Frank Reichelt | MAN_EN_1145680_Module60-33_R1a.doc

8.4 Reference sides

8.4.1 Module 60/33

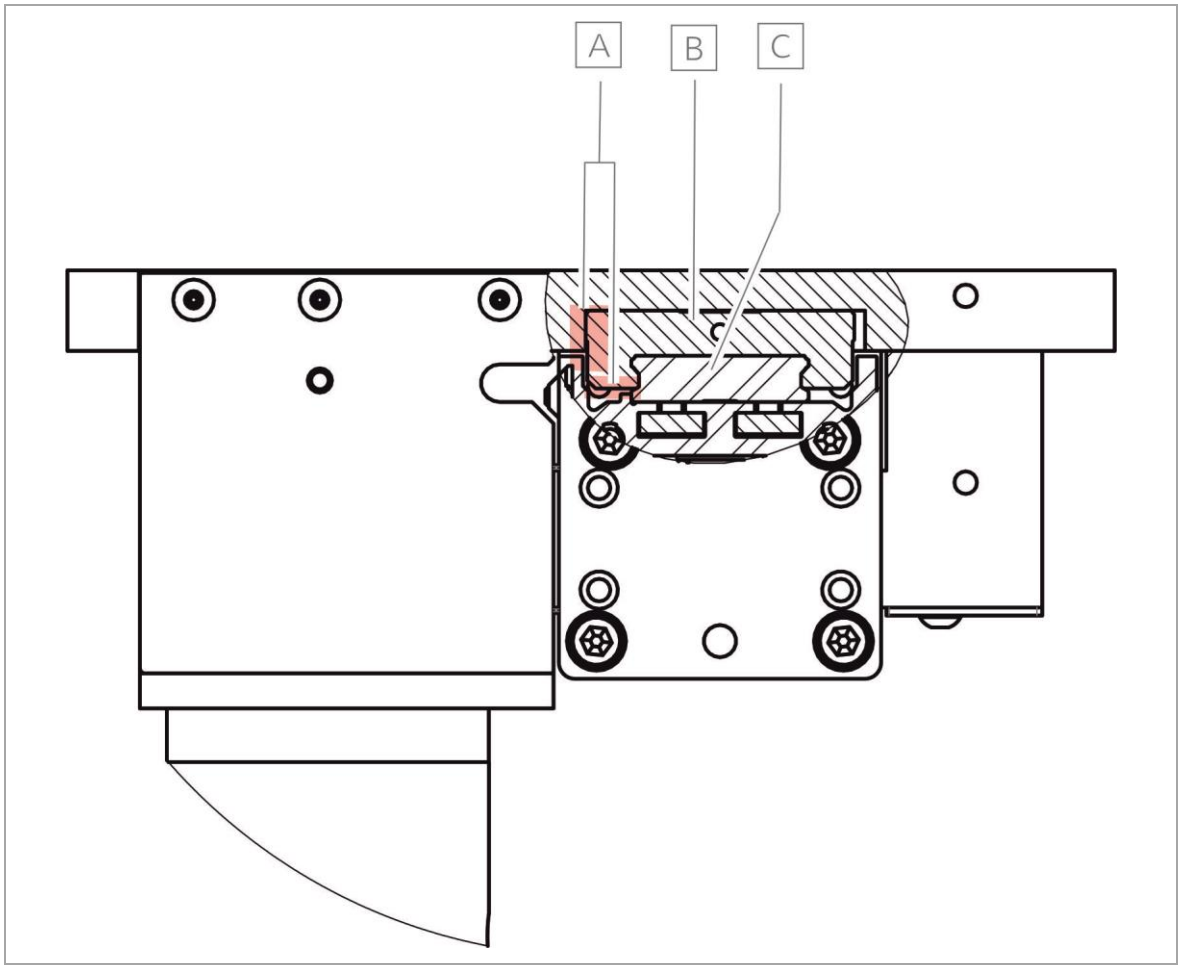

Figure 36 Reference side of the guide carriage at the module 60/33

A Reference side of the guide carriage
B Guide carriage
C Guide rail

Generated by: Frank Reichelt | MAN_EN_1145680_Module60-33_R1a.doc

8.4.2 Module 60/33 ZOM

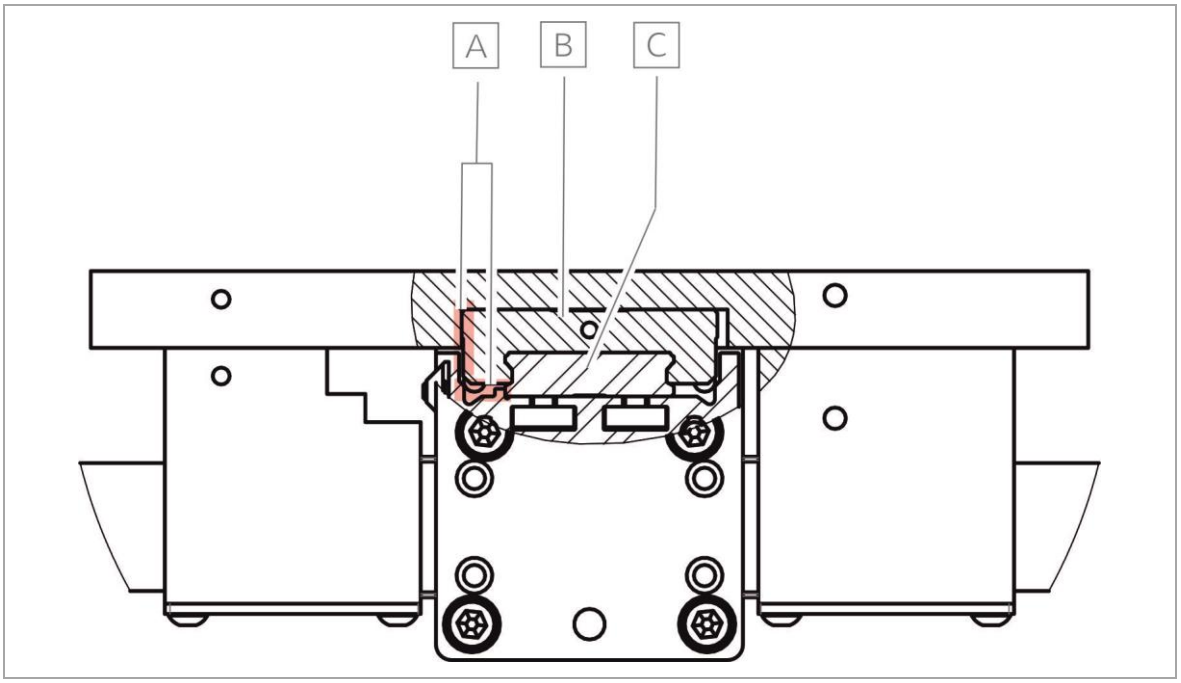

Figure 37 Reference side of the guide carriage at the module 60/33

A Reference side of the guide carriage
B Guide carriage
C Guide rail

Generated by: Frank Reichelt | MAN_EN_1145680_Module60-33_R1a.doc

9 Parts Lists and Drawings

9.1 Module 60/33, parts list TG1002894

Z-Pos.	Item no.	Designation
10	1002958	Basic body module 60/33; L = 305 mm
20	1002895	Guide rail, type: WER17RM(H), L = 303 mm
30	1002896	Cable duct module 60/33 (optional)
40	1003071	Cable duct D40 for DT (optional)
50	1126524	Deflector roller module 60/33
60	1126531	Deflector roller module 60/33
70	1126544	End plate module 60/33
70	1126821	End plate for rotaryARM, type: Module 60/33 (optional)
70	1126566	End plate for rotary table 80/100 and 100/140, type: Module 60/33 (optional)
70	1127517	End plate for flange gear PLFE64, type: Module 60/33 (optional)
80	1126636	Slot nut, M4 short
90	1126550	Slot nut M4
100	1126530	Sleeve
110	1126529	Bolt
120	1126539	Adapter plate
130	1129496	Shaft housing
140	1126554	Bracket plate
150	1129467	Cover plate
160	1129463	Lid bracket plate
170	1126549	Belt holder M 105
180	1126545	Counterpiece tension
190	028685	Spacer sleeves module 105, Adjust length when clamping the belt

Generated by: Frank Reichelt | MAN_EN_1145680_Module60-33_R1a.doc

Z-Pos.	Item no.	Designation
200	1129469	Bearing bolt
210	1126551	Motor adapter plate PLE60
220	1129471	Thoothed washer ST40.0 AT5/30-0, for PLE-gear; 40 mm wide
220	1129472	Thoothed washer ST30.0 AT5/30-0, for PLN70-gear; 30 mm wide
230	1129479	Bearing holder
240	732295	Clamping set, type: PSV 2061 14x26
240	732771	Clamping set, type: PSV 2061 19x35
250	729989	Grooved ball bearing 10 x 26 x 8 mm, type: 6000.2RS, DIN-no.: 625
260	626437	Circlip DIN-no.: 471, type: 10 x 1
270	626487	Cylindrical screw, zinc-plated, DIN-no.: 912, type: M5 x 10 at PLE60
270	626488	Cylindrical disc, zinc-plated, DIN-no.: 912, type: M5 x 12
280	626059	Cylindrical screw, zinc-plated, DIN-no.: 912, type: M5 x 16
290	1126614	Guide carriage, greased, with lubrication nipple, left
295	1145153	Guide carriage, greased, with lubrication nipple right, as a set
300	026481	Dampener green PUR 80 Shore
310	735189	Centring sleeve, type: ZBH-9
320	626037	Cylindrical screw, zinc-plated, DIN-no.: 912, type: M6 x 20
330	627576	Threaded pin, zinc-plated, DIN-no.: 913, type: M5 x 10
340	626338	Cylindrical pin DIN-no.: 6325, type: 6m6 x 16
350	627120	Cylindrical pin DIN-no.: 6325, type: 4m6 x 16
360	626058	Cylindrical screw, zinc-plated, DIN-no.: 912, type: M5 x 25
370	626175	Lens-head screw stainless steel DIN-no.: ISO 7380, type: M4 x 8 V2A
380	626795	Cylindrical screw, zinc-plated DIN no. 912; type: M5 x14
390	728363	Sealing ring, type: 0-1/4
400	626244	Cylindrical screw, zinc-plated, DIN-no.: 912, type: M6 x 60
410	626243	Cylindrical screw, zinc-plated, DIN-no.: 912, type: M6 x 55
420	626237	Cylindrical screw, zinc-plated, DIN-no.: 912, type: M5 x 80

Generated by: Frank Reichelt | MAN_EN_1145680_Module60-33_R1a.doc

Z-Pos.	Item no.	Designation
430	626710	Cylindrical screw, zinc-plated, DIN-no.: 912, type: M4 x 8
440	626136	Recessed-head screw, zinc-plated, DIN-no.: 7991, type: M5 x 20
450	1126543	Switching strip profiLINE 200
460	1021001	Connection socket profiLINE 200
470	025626	Retaining plate
480	1095649	Installation plug M12-5pin. Compl., type: RSFM M12 x 1
480	725163	Installation plug, round, type: SFV 50/6
490	025165	Induction switch PNP normally closed contact, type: IKF05BADKX-62602
500	028585	Limit switch, type: easyLINE
510	626485	Cylindrical screw, zinc-plated, DIN-no.: 912, type: M4 x 30
520	625181	Threaded pin, zinc-plated, DIN-no.: 913, type: M4 x 4
530	626623	Cylindrical screw, zinc-plated, DIN-no.: 912, type: M5 x 60
540	1045945	Slot nut, type: Module 90/15
550	627630	Lens-head screw, zinc-plated, DIN-no.: ISO 7380, type: M3 x 8

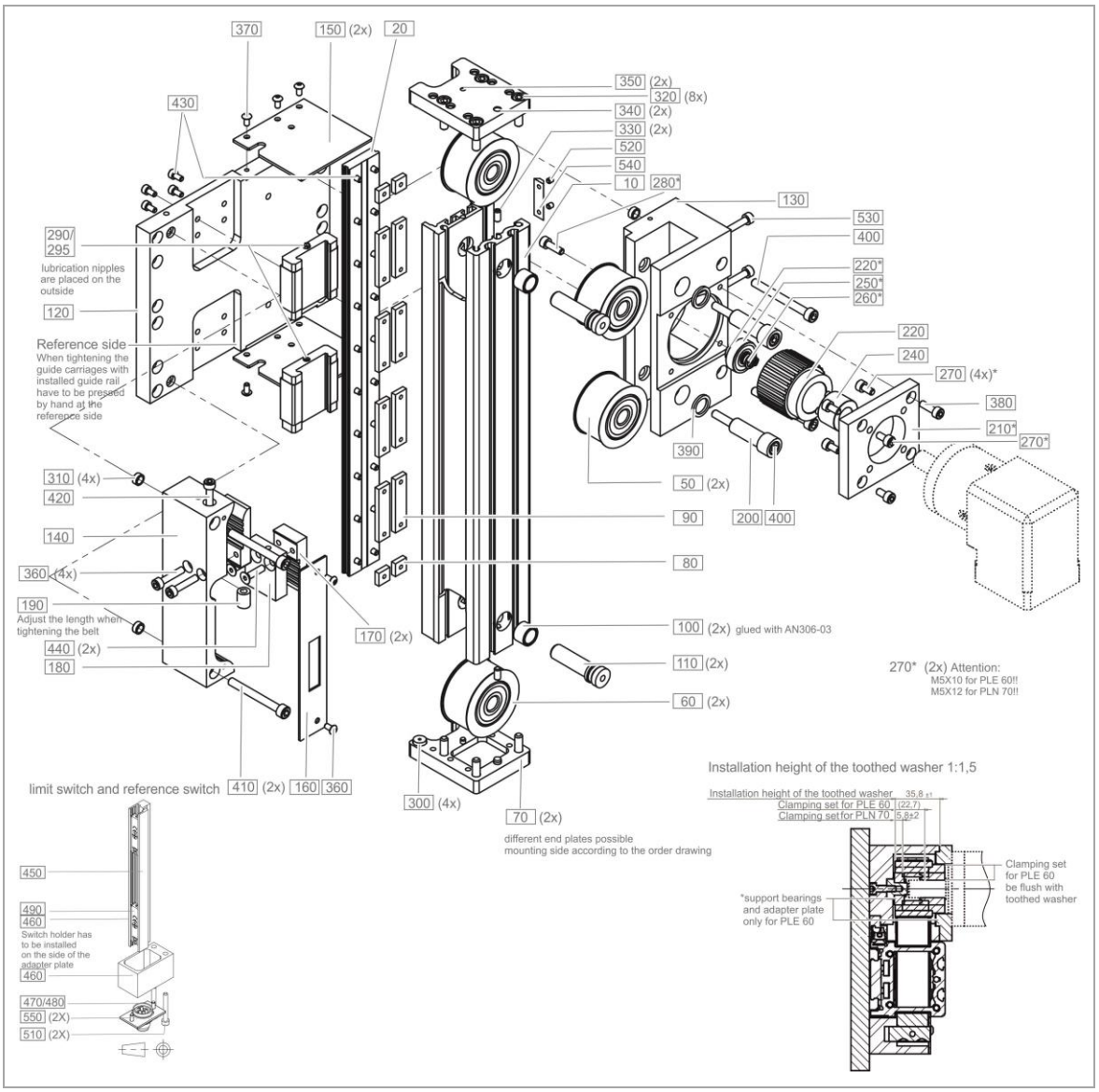

Figure 38 Exploded drawing TG1002894

Generated by: Frank Reichelt | MAN_EN_1145680_Module60-33_R1a.doc

9.2 Module 60/33 ZOM, parts list TG1003181

Z-Pos.	Item no.	Designation
10	TG1002958	Basic body module 60/33
20	TG1002895	Guide rail, type: WER17RM(2)H
30	TG1002896	Cable duct (optional)
40	1115776	Cable duct D40 for DT (optional)
50	1126524	Deflector roll
60	1126531	Deflector roll
70	1126544	End plate module 60/33
80	1126636	Slot nut, M4 short
90	1126550	Slot nut M4
100	1126530	Sleeve d12 D16
110	1126529	Bolt
120	1126620	Adapter plate ZOM
130	1126537	Cover switching strip
140	1126538	Cover
150	1129512	Cover plate
160	1129509	Bearing bolt ZOM
170	1093534	Gearbox housing complete set, type: Module 55, gearbox
180	1123004	Belt gear, type: Module 55 ZOM / PLE80
200	1126540	Adapter plate ZOM to module 160
	1126941	Adapter plate ZOM to module 115
220	1126614	Guide carriage, greased, with lubrication nipple, left
225	1145153	Guide carriage, greased, with lubrication nipple, right
230	732766	Toothed belt

Generated by: Frank Reichelt | MAN_EN_1145680_Module60-33_R1a.doc

Z-Pos.	Item no.	Designation
240	026481	Dampener green PUR 80 Shore
245	1008664	Centring sleeve, type: ZBH-7
250	626745	Cylindrical screw, zinc-plated, DIN-no.: 912, type: M5 x 55
260	626175	Oval-head screw, stainless steel, ISO 7380, type: M4 x 8 V2A
270	627576	Threaded pin, zinc-plated, DIN-no.: 913, type: M5 x 10
280	626338	Cylindrical pin DIN-no.: 6325, type: 6m6 x 16
290	627120	Cylindrical pin DIN-no.: 6325, type: 4m6 x 16
300	626037	Cylindrical screw, tin-plated, ISO 4762, type: M6 x 20
310	626710	Cylindrical screw, tin-plated, ISO 4762, type: M4 x 8
315	626028	Circlip DIN-no.: 471, type: 12 x 1
330	1126543	Switching strip profiLINE 200
340	1145198	Adapter piece
350	025626	Retaining plate
360	1095649	Installation plug M12-5pin. compl., type: RSFM M12x1
390	725163	Installation plug, round, type: SFV 50/6
400	025165	Induction switch NC normally closed contact, type: IKF05BADKX-62602
410	726744	Induction switch NO normally open contact, type: IKF05BBDKX-62619
420	028585	Limit switch, type: easyLINE
430	626485	Cylindrical screw, tin-plated, ISO 4762, type: M4 x 30
440	625181	Threaded pin, zinc-plated, DIN-no.: 913, type: M4 x 4
450	627630	Lens-head screw, zinc-plated, DIN-no.: ISO 7380, type: M3 x 8
460	626623	Cylindrical screw, tin-plated, ISO 4762, type: M5 x 60
470	1045945	Slot nut, type: Module 90/15

Generated by: Frank Reichelt | MAN_EN_1145680_Module60-33_R1a.doc

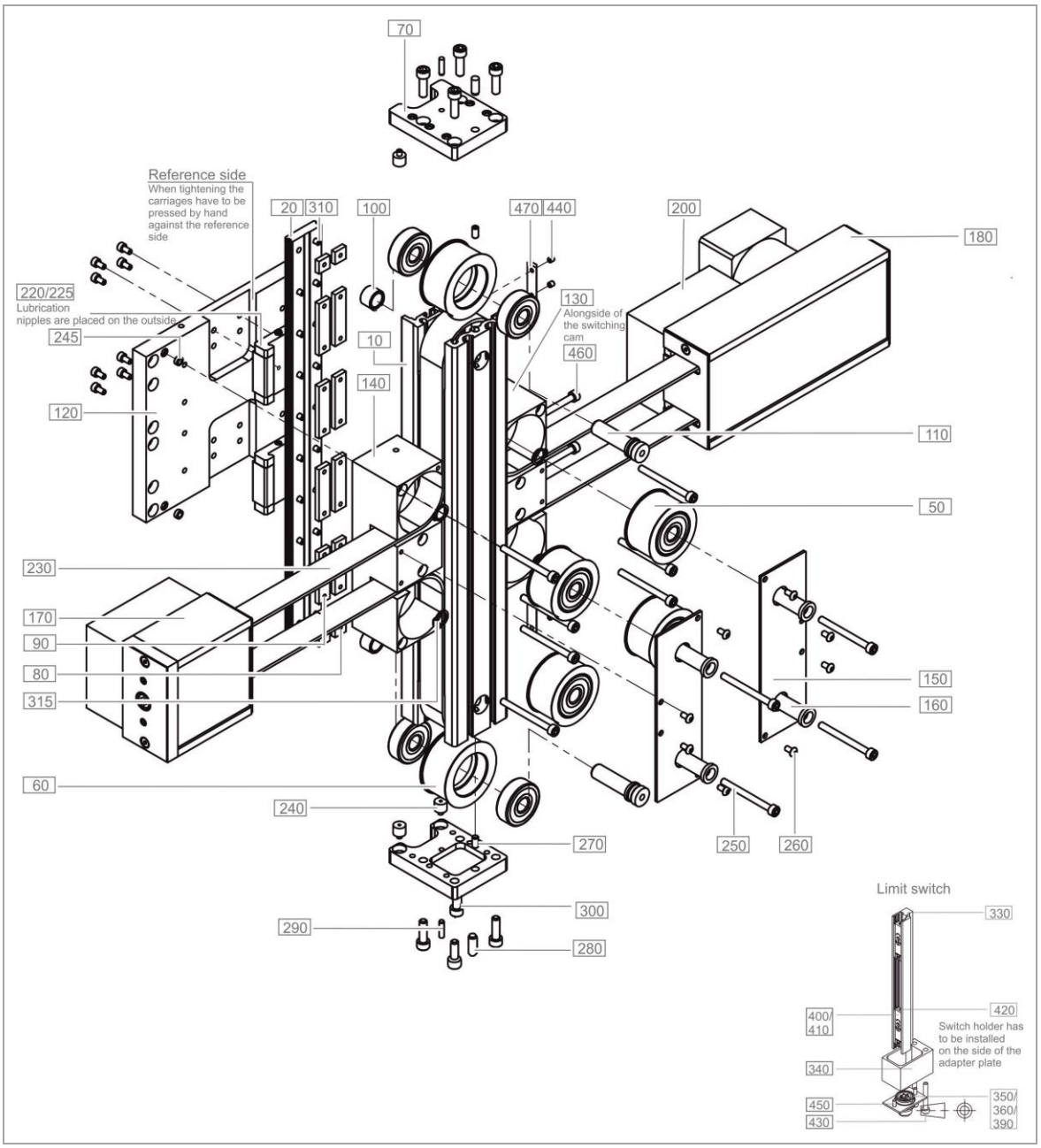

Figure 39 Exploded drawing TG1003181