Guides and Slides

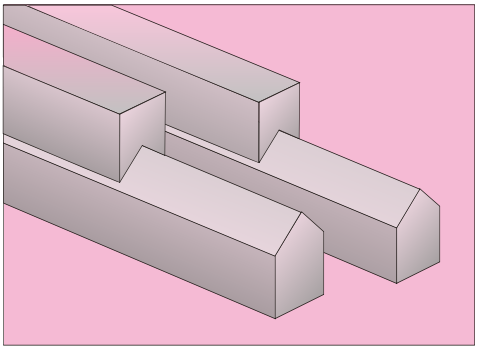

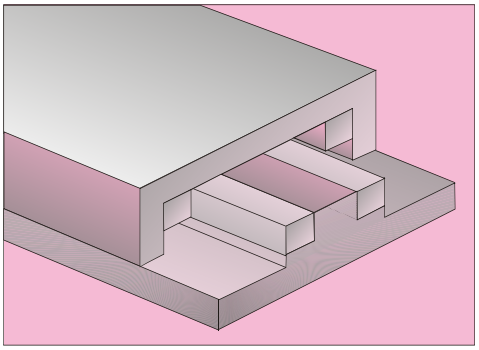

Contents

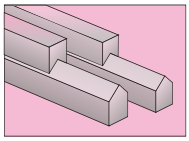

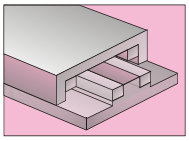

Longitudinal guides

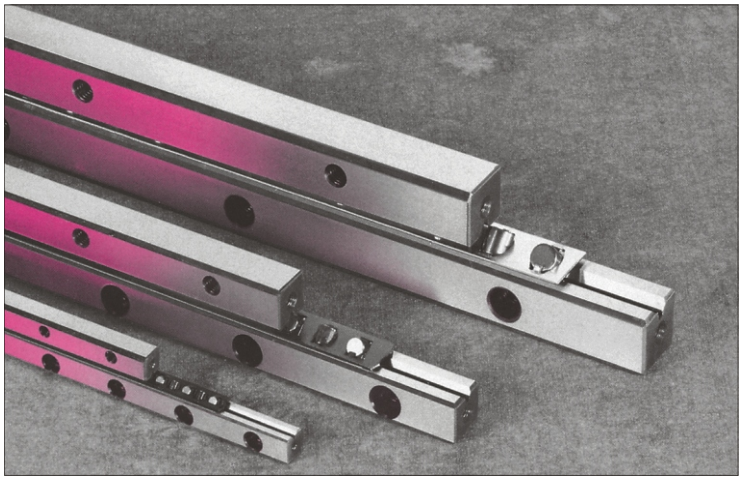

Type R+K

Main characteristics:
- Smooth running
- Low friction coefficient
- Long service life
- Maximum precision and rigidity thanks to pretensioning
- Low maintenance
- No stick-slip effect

Areas of use:
- Measuring and testing equipment
- Closed-loop control systems
- Precision mechanical engineering

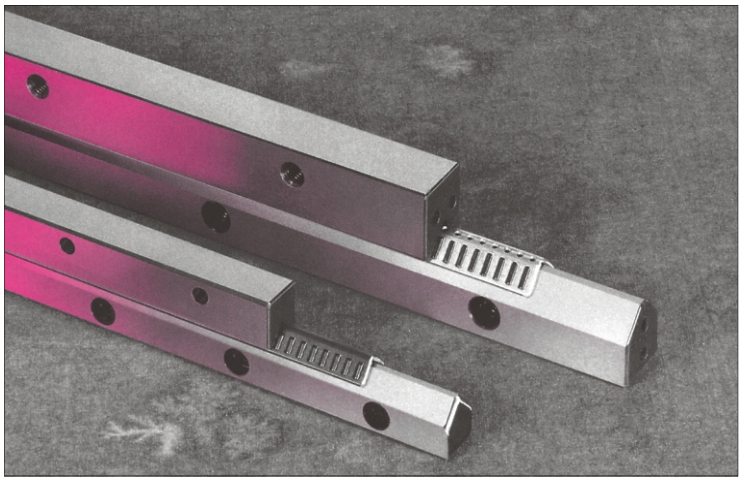

Type N/O

Main characteristics:
- Smooth running
- Low friction coefficient (under normal conditions $\mu_r = 0.003$)
- Long service life
- No stick-slip effect
- Maximum precision and rigidity thanks to pretensioning
- Low maintenance
- Very high load-bearing capacity

Areas of use:
- Processing machines
- Machine tools
- Precision mechanical

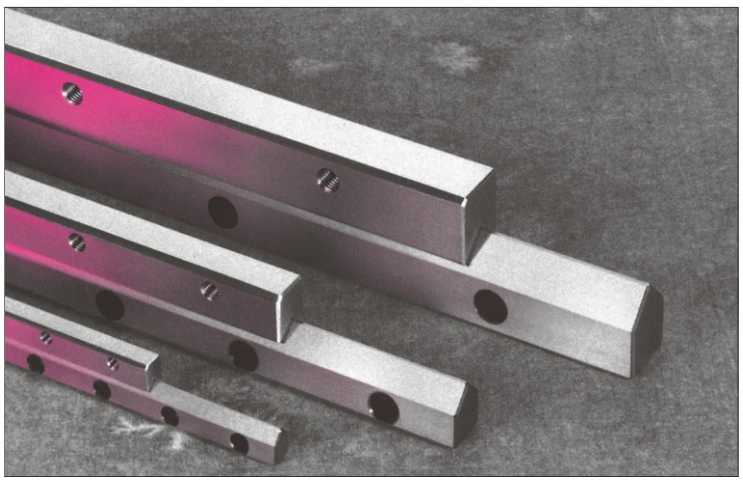

Type M/V

Main characteristics:
- Good damping properties
- No noticeable stick-slip effect
- Low sensitivity to dirt and impacts
- Good absorption of transverse forces
- High resistance to wear
- Very quiet running

Areas of use:
- Ultrasound welding
- Grinding machines, woodworking machines
- For extremely short stroke movements

What you should know...
In technology, a distinction is generally made between rotary and translatory movements.
Translatory movements are normally performed in practice by longitudinal guides.
Longitudinal guides are used in large numbers for positioning work in mechanical engineering and handling
systems.
Various guide systems are available, depending on operational requirements and the main property of the application. Guide systems are generally classified as anti- friction slideways and standard slideways.

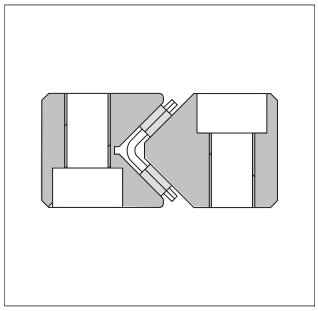

Anti-friction slideways
In all anti-friction slideways, the longitudinal guides are rolled against each other by rolling elements.
In the case of the IEF guides, various rolling elements such as balls **K**, rollers **R** and needle
rollers **N** are available.
By virtue of the low-loss rolling friction principle, these guides achieve a very high level of efficiency.
Anti-friction slideways have achieved a high level of importance in toolmaking and precision mechanical engineering, measuring and testing equipment and also automation tasks.
Anti-friction slideways boast the following properties in particular:

- Very low, speed-independent friction
- No stick-slip effect (back-sliding), thereby creating optimum conditions for technical control tasks
- Low hysteresis losses
- High rigidity
- No play thanks to pretensioning
- Low wear
- Low maintenance

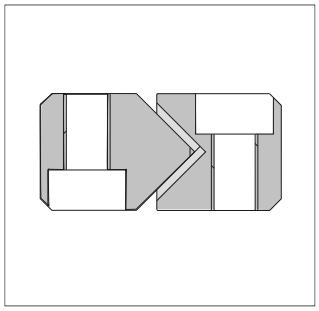

Standard slideways
These guides slide onto each other with the guide surfaces under dry or mixed friction.
Guide systems constructed on the basis of standard slideways boast high rigidity and also very good damping perfor- mance.
Other advantages such as low sensitivity to dirt and impacts allow them to be used in ultra- sound welding systems, grinding machines and also woodworking machines.
Another advantage of these guides is that they can be used without restrictions in horzontal and vertical applications. The use of state-of-the-art plastic sliding coatings significantly improves their resistance to wear and their efficiency.
The advantageous properties of standard slideways are, in particular:

- Very high rigidity
- Good damping performance
- Use for extremely short, high-frequency strokes
- Excellent absorption of transverse forces, particularly when stationary
- Minimum stick-slip effect in the case of plastic-coated guides
- Unrestricted horizontal and vertical use
- Low sensitivity to dirt and impacts
- Quiet running

Hydrostatic and aerostatic guide systems occupy a special position amongst standard slideways.
With both systems, the elements of the sliding partners are completely separated.
In the case of hydrostatic systems, liquids are used as the sliding media, with air being used in the case of aerostatic guides.
These are complex applications with additional equipment. Higher operating and maintenance costs are unavoi- dable.
These systems do not form part of the IEF range.

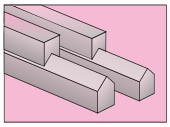

Type R+K

Cross-roller guide rails of **Types R+K** can be fitted with ball or roller cages and are suitable for applications involving medium to high demands. These standard elements can be interchanged. They are used in mechanical engineering and fixture construction, as well as in measuring and testing systems. Both horizontally and vertically. For vertical use, we recommend the cage variants V and HVK, and the end screws EV.

The guide rails are made of tool steel and are hardened. The hardness is 60-62 HRC. The surfaces are very finely ground.
Under normal operational conditions, they can be used at speeds of up to 50 m/min.

Main characteristics:
- Smooth running
- Low friction coefficient (μ_r = 0.003 under normal conditions)
- Long service life
- No stick-slip effect
- Optimum precision

Longitudinal guides Type R with cross rollers are used for high stress and precision requirements.

Longitudinal guides Type K with ball guides are less sensitive to dirt than roller guides and are suitable for softrunning movements and low stress requirements.

Ordering example
for one complete guide

Example:
Rail size 6
Guide length 300 mm
Stroke 100 mm
Horizontal use

The following are required:
4 ea. R6 300 Article No. 300105,
32 ea. rollers, Article No. 309022
= 2 cages with 16 rollers.
8 ea. end screws
Article No. 309102

Order code	Article No.	A	B	C	D	G	H	J	K	L	M	N	T	Weight [g]
R1 020	300401									20	1x10			2
R1 030	300402									30	2x10			3
R1 040	300403									40	3x10			4
R1 050	300404									50	4x10			5
R1 060	300405	8,5	4	1,8	1,5	M2	3	3,9	1,65	60	5x10	5	1,4	6
R1 070	300406									70	6x10			7
R1 080	300407									80	7x10			8
R1 090	300408									90	8x10			9
R1 100	300409									100	9x10			10
R1 120	300410									120	11x10			12
R1 140	300411									140	13x10			14
R2 030	300501									30	1x15			6
R2 045	300502									45	2x15			9
R2 060	300503									60	3x15			12
R2 075	300504									75	4x15			15
R2 090	300505									90	5x15			18
R2 105	300506	12	6	2,5	2	M3	4,3	5,5	2,5	105	6x15	7,5	2,0	22
R2 120	300507									120	7x15			25
R2 135	300508									135	8x15			28
R2 150	300509									150	9x15			31
R2 180	300510									180	11x15			37
R2 210	300511									210	13x15			44
R3 050	300001									50	1x25			23
R3 075	300002									75	2x25			34
R3 100	300003									100	3x25			45
R3 125	300004									125	4x25			56
R3 150	300005									150	5x25			67
R3 175	300006	18	8	3,5	3	M4	6	8,2	3,2	175	6x25	12,5	3,2	78
R3 200	300007									200	7x25			89
R3 225	300008									225	8x25			100
R3 250	300009									250	9x25			111
R3 275	300010									275	10x25			122
R3 300	300011									300	11x25			133
R6 100	300101									100	1x50			145
R6 150	300102									150	2x50			220
R6 200	300103									200	3x50			295
R6 250	300104	31	15	6	6	M6	9,5	13,9	5,2	250	4x50	25	5,2	370
R6 300	300105									300	5x50			445
R6 350	300106									350	6x50			520
R6 400	300107									400	7x50			595
R6 450	300108									450	8x50			670
R6 500	300109									500	9x50			745
R6 550	300110									550	10x50			815

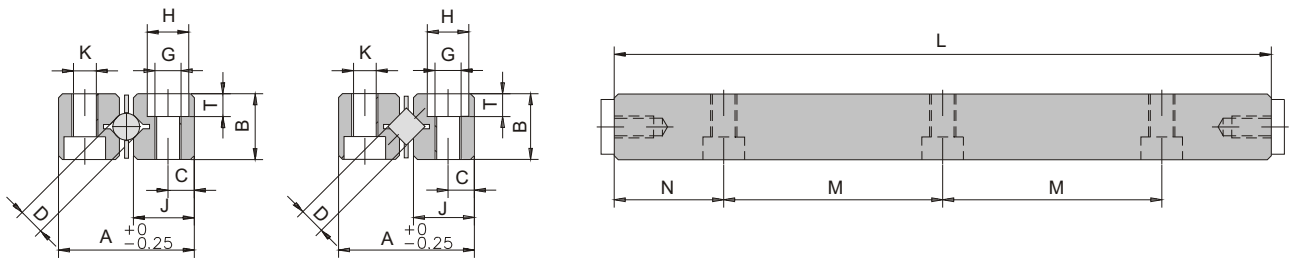

Ball / roller guide

Order code	Article No.	A	B	C	D	G	H	J	K	L	M	N	T	Weight [g]
R9 200	300201									200	1x100			630
R9 300	300202									300	2x100			945
R9 400	300203									400	3x100			1260
R9 500	300204									500	4x100			1575
R9 600	300205									600	5x100			1890
R9 700	300206	44	22	9	9	M8	10,5	19,7	6,8	700	6x100	50	6,2	2205
R9 800	300207									800	7x100			2520
R9 900	300208									900	8x100			2835
R9 1000	300209									1000	9x100			3150
R9 1100	300210									1100	10x100			3465
R9 1200	300211									1200	11x100			3780
R12 200	300301									200	1x100			1040
R12 300	300302									300	2x100			1565
R12 400	300303									400	3x100			2090
R12 500	300304									500	4x100			2615
R12 600	300305									600	5x100			3140
R12 700	300306	58	28	12	12	M10	13,5	25,9	8,5	700	6x100	50	8,2	3665
R12 800	300307									800	7x100			4190
R12 900	300308									900	8x100			4715
R12 1000	300309									1000	9x100			5240
R12 1100	300310									1100	10x100			5765
R12 1200	300311									1200	11x100			6290
R15 300	300601									300	2x100			2380
R15 400	300602									400	3x100			3160
R15 500	300603									500	4x100			3950
R15 600	300604									600	5x100			4740
R15 700	300605	71	36	14	15	M12	16,5	31,9	10,5	700	6x100	50	10,2	5530
R15 800	300606									800	7x100			6320
R15 900	300607									900	8x100			7110
R15 1000	300608									1000	9x100			7910
R15 1100	300609									1100	10x100			8710
R15 1200	300610									1200	11x100			9480
R18 300	300701									300	2x100			3140
R18 400	300702									400	3x100			4190
R18 500	300703									500	4x100			5240
R18 600	300704									600	5x100			6290
R18 700	300705									700	6x100			7340
R18 800	300706									800	7x100			8390
R18 900	300707	83	40	18	18	M14	18,5	37,4	12,5	900	8x100	50	12,2	9440
R18 1000	300708									1000	9x100			10490
R18 1100	300709									1100	10x100			11540
R18 1200	300710									1200	11x100			12590

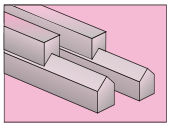

Type R+K

Roller retainer
type R-1...9 HVK
- Suitable
for all installation types
- Rollers retained
- Made from plastic

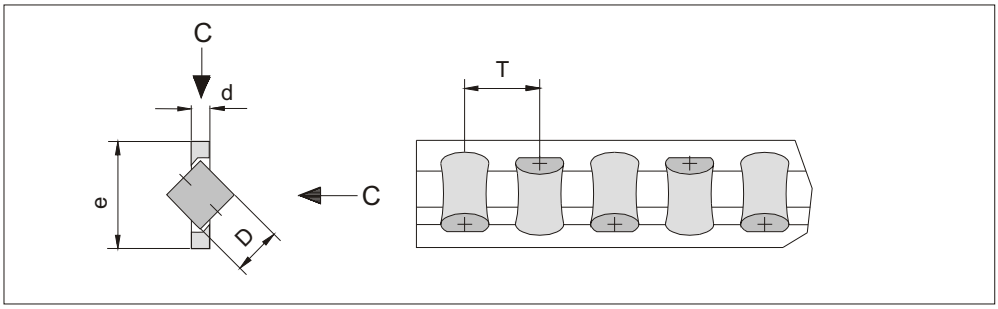

Roller retainer type R-1...9 HVK

Order code	Article No.	D	d	e	Pitch T	Load rating C_{dyn}/roller [N]
R-1 HVK	309026	1,5	0,45	3,5	3	50
R-2 HVK	309025	2	0,75	5	4	85
R-3 HVK	309021	3	1	7	5	130
R-6 HVK	309022	6	2,5	14	9	530
R-9 HVK	309023	9	3,5	20	14	1300

Roller retainer
type R-3...12 H
- For horizontal installation
- Rollers retained
- Made from steel

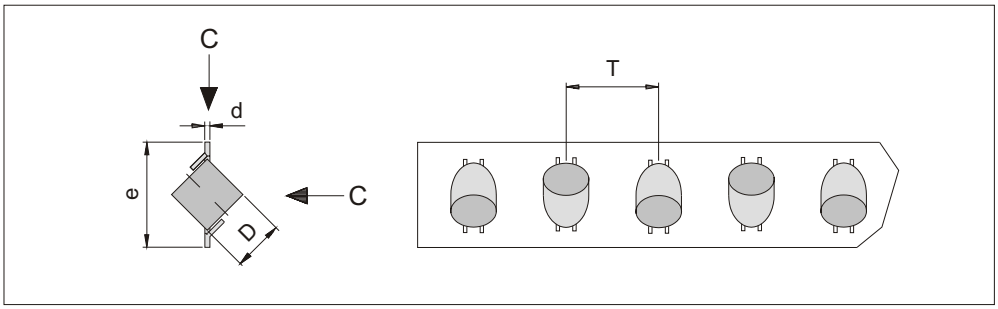

Roller retainer type R-3...12 H

Order code	Article No.	D	d	e	Pitch T	Load rating C_{dyn}/roller [N]
R-3 H	309001	3	0,5	8	5	130
R-6 H	309002	6	0,8	14	12	530
R-9 H	309003	9	1	20	18	1300
R-12 H	309004	12	1,2	25	22	2500

Roller retainer
type R-3...18 V
- For vertical installation
- Rollers not retained
- Made from brass

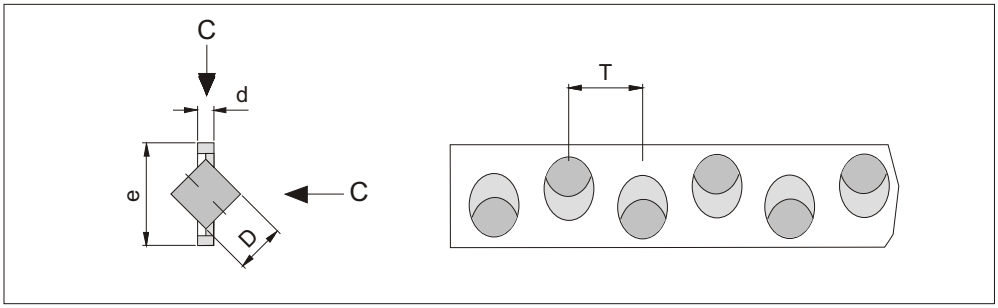

Roller retainer type R-3...18 V

Order code	Article No.	D	d	e	Pitch T	Load rating C_{dyn}/roller[N]
R-3 V	309011	3	1	7	5	130
R-6 V	309012	6	2	15	12	530
R-9 V	309013	9	3	20	15	130
R-12 V	309014	12	4	25	22	2500
R-15 V	309015	15	5	35	28	4400
R-18 V	309016	18	6	40	33	7000

Ball cage Type K-1...12 HVK
- Suitable
for all installation types
- Balls held
- Material plastic, from
size 6 in compound design
plastic/steel

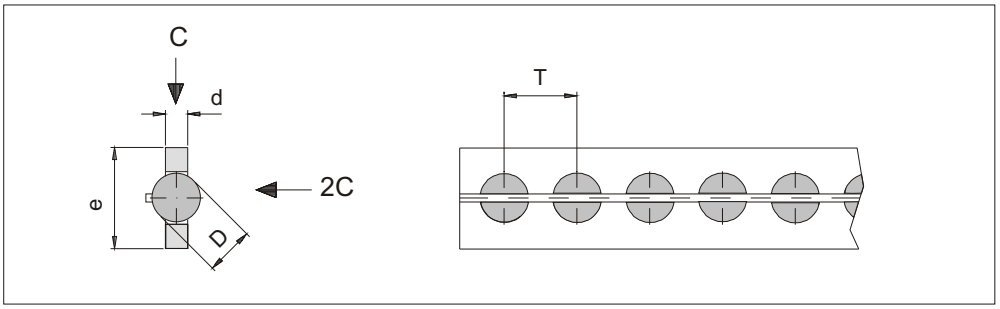

Order code	Article No.	D	d	e	Pitch T	Load rating C_{dyn}/roller [N]
K-1 HVK	309061	1,5	0,45	3,5	2,2	9
K-2 HVK	309062	2	0,75	5	4	15
K-3 HVK	309063	3	1	7	4,2	25
K-6 HVK	309064	6	2,5	14	9	65
K-9 HVK	309065	9	3,5	20	14	150
K-12 HVK	309066	12	4,5	25	18	260

Ball cage Type K-15...24 V
- For all installation types,
apart from over-running cages
- Balls not held
- Material plastic/brass

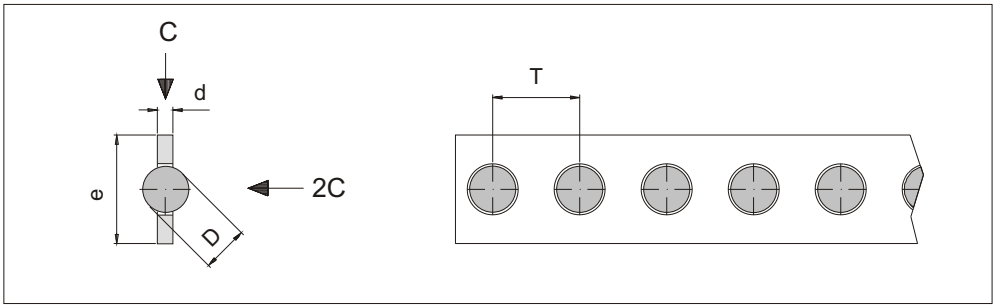

Order code	Article No.	D	d	e	Pitch T	Load rating C_{dyn}/roller [N]
K-15 V	309067	15	5	35	28	410
K-18 V	309068	18	6	40	33	600

End screws Type EH
for balls + rollers,
installation horizontal.

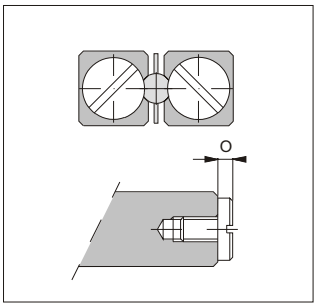

Order code	Article No.	Dimension O
R-1 EH	309105	1,5
R-2 EH	309106	2,0
R-3 EH	309101	2.0
R-6 EH	309102	3,0
R-9 EH	308103	4,0
R-12 EH	309104	5,0
R-15 EH	309107	6,0
R-18 EH	309108	6,0

End screws Type EV
for balls + rollers,
installation vertical.

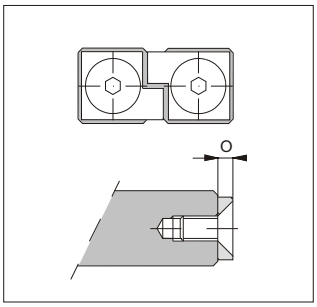

Order code	Article No.	Dimension O
R-1 EV	309115	1,5
R-2 EV	309116	2,0
R-3 EV	309111	2.0
R-6 EV	309112	3,0
R-9 EV	308113	4,0
R-12 EV	309114	5,0
R-15 EV	309117	6,0
R-18 EV	309118	6,0

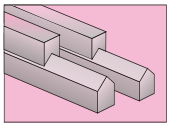

Type N/O

Needle roller guide rails of the **Type N/O** are suitable for applications in which the stress is very high and/or when very short strokes have to be travelled. They are best used in mechanical engineering and also in machine tools and processing machines. They can be used both horizontally and vertically.

Due to "roll friction", the linear guides function almost wear-free. The guide rails are made of tool steel and are har-dened. The hardness is around 60-62 HRC.
The surfaces are finely ground. Under normal conditions, they can be used at speeds of up to 50 m/min. In order to achieve maximum service life, it is ne-cessary to protect the guides against the effects of dirt by using a suitable seal.

Main characteristics:
- Smooth running
- Low friction coefficient (μ_r = 0.003 under normal conditions)
- Long service life
- No stick-slip effect
- Maximum precision and rigidity thanks to pretensioning
- Very high load-bearing capacities

Order example
for one complete guide

Example:
Rail size 6
Guide length 300 mm
Stroke 100 mm
Horizontal use

The following are required:
2 ea. N6 300 Article No. 302004,
2 ea. O6 300, Article No. 302304,
124 ea. needles, Article No. 309081
= 2 cages of 62 needles,
4 ea. end pieces NO-6
Article No. 309122

Order code	Article No.	A	B	C	D	E	G	H	J	K	L	M	N	P	T	Weight [g]
N6 100	302000										100	1x50				145
O6 100	302300										100	1x50				160
N6 150	302001										150	2x50				215
O6 150	302301										150	2x50				240
N6 200	302002										200	3x50				285
O6 200	302302										200	3x50				320
N6 250	302003										250	4x50				360
O6 250	302303	31	15	6	2	17,5	M6	9,2	16	5,4	250	4x50	25	11	5,2	400
N6 300	302004										300	5x50				430
O6 300	302304										300	5x50				480
N6 400	302005										400	7x50				570
O6 400	302305										400	7x50				640
N6 500	302006										500	9x50				715
O6 500	302306										500	9x50				800
N6 600	302007										600	11x50				860
O6 600	302307										600	11x50				960
N9 200	302051										200	1x100				685
O9 200	302351										200	1x100				695
N9 300	302052										300	2x100				1020
O9 300	302352										300	2x100				1030
N9 400	302053										400	3x100				1355
O9 400	302353										400	3x100				1365
N9 500	302054										500	4x100				1640
O9 500	302354										500	4x100				1700
N9 600	302055										600	5x100				2025
O9 600	302355	44	22	9	2	24,5	M8	10,5	24	6,8	600	5x100	50	15	6,2	2035
N9 700	302056										700	6x100				2360
O9 700	302356										700	6x100				2370
N9 800	302057										800	7x100				2695
O9 800	302357										800	7x100				2705
N9 900	302058										900	8x100				3030
O9 900	302358										900	8x100				3040
N9 1000	302059										1000	9x100				3365
O9 1000	302359										1000	9x100				3375
N9 1100	302060										1100	10x100				3700
O9 1100	302360										1100	10x100				3710
N9 1200	302061										1200	11x100				4035
O9 1200	302361										1200	11x100				4045

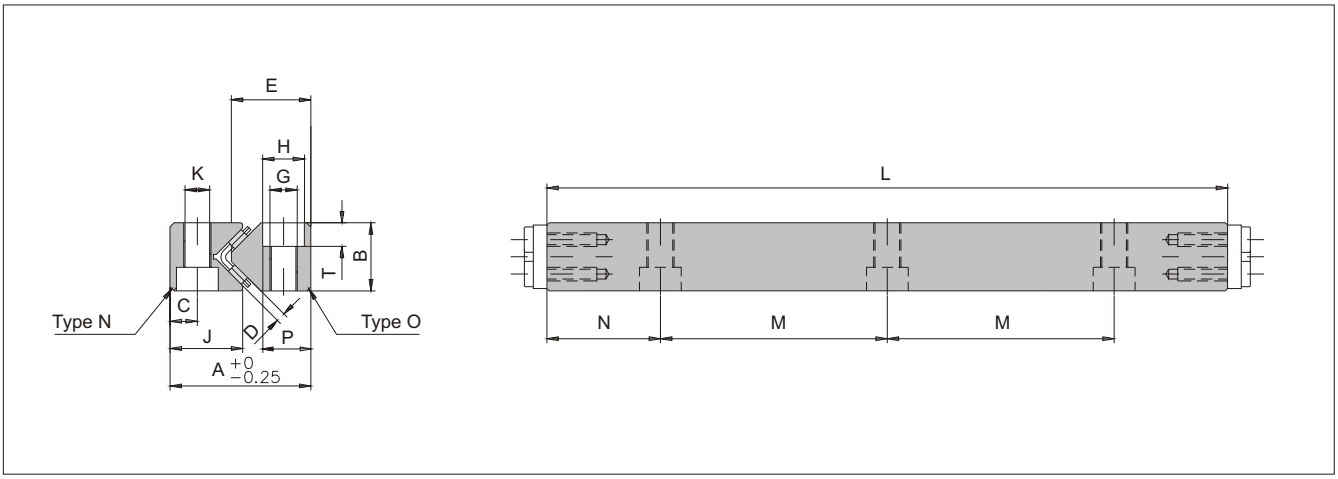

Needle guide

Angled flat cage, Type HW

- For horizontal and vertical installation
- Needles held
- Material light metal

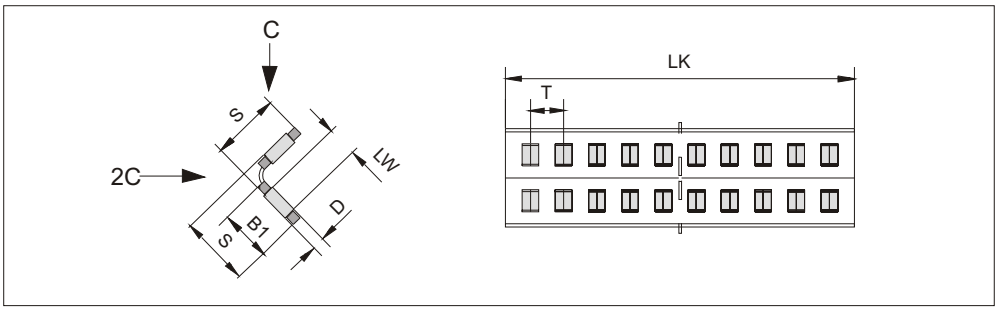

Angled flat cage type HW

/		for rails	Dimensions [mm]						Load rating C_{dyn}
Order code	**Article No.**	**size**	**D**	**LW**	**Pitch T**	**S**	**B1**	**LK max.**	**needle [N]**
HW 10	309081	6	2	4,8	4	10	8	1000	530

End pieces for needle roller rails, Types NN and NO

Installation horizontal and vertical

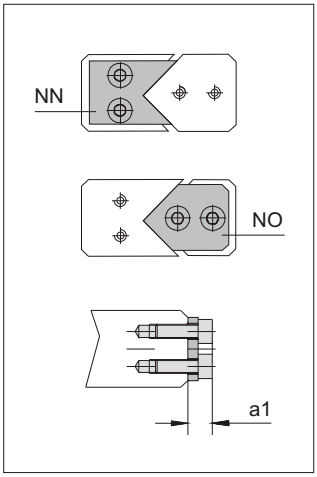

End pieces

Order code	Article No.	a1 [mm]
NN-6	309121	5
NO-6	309122	5
NN-9	309123	7
NO-9	309124	7

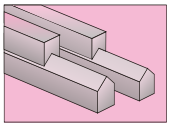

Type M/V

Plastic-coated guides **Type M/V** are standard slideways. They are mainly suitable for applications in which high transverse forces and transverse accelerations, vibrations and impacts occur. They are also for highfrequen-cy, extremely short strokes.
Normally, no anti-friction slideways can be used here, because these cause impressions or result in pit formation on the running surface.
These guides are preferably used in machines and equipment construction. They can be used both horizontally and vertically.

The V rail is made of tool steel and is hardened and ground. The hardness is around 60-62 HRC. The M-rail coated with
a slideway lining is not hardened. Under normal operating conditions, speeds of up to 15 m/min can be travelled in the lubricated state (unlubricated up to 8 m/min).
Depending on the lubrication, the friction value is 0.06-0.1 with a surface pressure of 0.5 N/mm^2.
As the surface pressure increases, the friction value also in-creases.
The coated M-rail can be given lubrication grooves.

Load

Rail size	Permissible stress F/mm Rail length dynamic	static
3	0,9 N/mm	4,5 N/mm
6	2,1 N/mm	10,5 N/mm
9	4 N/mm	20 N/mm
12	5 N/mm	25 N/mm

Main characteristics

- Good damping properties
- No great stick-slip effect
- Insensitive to dirt and impact
- High resistance to wear, therefore long service life

Ordering example
for one complete guide

Example:
Rail size 6
Guide length 300 mm
Stroke 100 mm

The following are required:
2 ea. V 6300, Article No. 301105
2 ea. M 6200, Article No. 301603

Order code	Article No.	A	B	C	D	E	G	H	J	K	L	M	N	T	Weight [g]
M3 050	301501										50	1x25			19
V3 050	301001										50	1x25			25
M3 075	301502										75	2x25			30
V3 075	301002										75	2x25			38
M3 100	301503										100	3x25			41
V3 100	301003										100	3x25			51
M3 125	301504										125	4x25			52
V3 125	301004										125	4x25			64
M3 150	301505										150	5x25			63
V3 150	301005	18	8	3,5	0,6	10,8	M4	6	9	3,3	150	5x25	12,5	3,2	77
M3 175	301506										175	6x25			74
V3 175	301006										175	6x25			90
M3 200	301507										200	7x25			85
V3 200	301007										200	7x25			103
M3 225	301508										225	8x25			96
V3 225	301008										225	8x25			116
M3 250	301509										250	9x25			107
V3 250	301009										250	9x25			129
M3 275	301510										275	10x25			118
V3 275	301010										275	10x25			142
M3 300	301511										300	11x25			130
V3 300	301011										300	11x25			155
M6 100	301601										100	1x50			145
V6 100	301101										100	1x50			175
M6 150	301602										150	2x50			218
V6 150	301102										150	2x50			263
M6 200	301603										200	3x50			290
V6 200	301103										200	3x50			350
M6 250	301604										250	4x50			363
V6 250	301104	31	15	6	1	19,3	M6	10	16	5,3	250	4x50	25	5,2	438
M6 300	301605										300	5x50			435
V6 300	301105										300	5x50			525
M6 350	301606										350	6x50			508
V6 350	301106										350	6x50			613
M6 400	301607										400	7x50			580
V6 400	301107										400	7x50			700
M6 450	301608										450	8x50			653
V6 450	301108										450	8x50			788
M6 500	301609										500	9x50			725
V6 500	301109										500	9x50			875

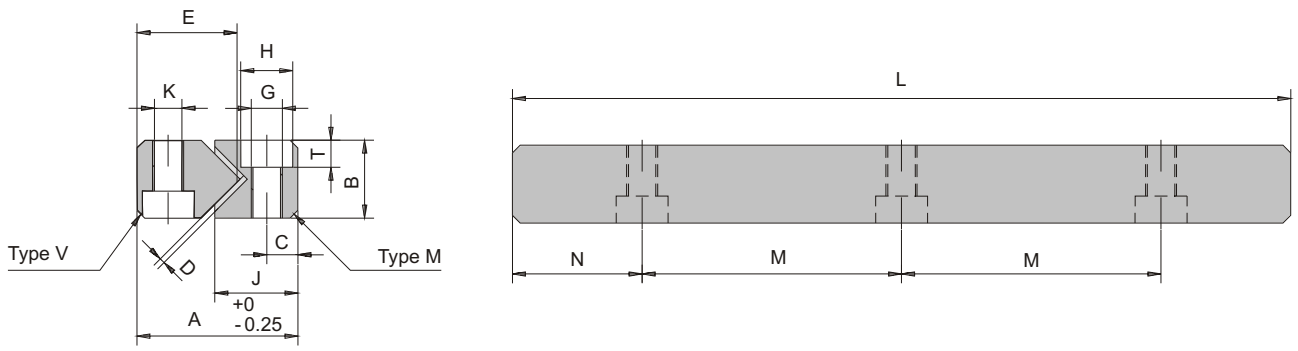

Plastic-coated guide

Order code	Article No.	A	B	C	D	E	G	H	J	K	L	M	N	T	Weight [g]
M9 200	301701										200	1x100			640
V9 200	301201										200	1x100			770
M9 300	301702										300	2x100			955
V9 300	301202										300	2x100			1156
M9 400	301703										400	3x100			1270
V9 400	301203										400	3x100			1543
M9 500	301704										500	4x100			1585
V9 500	301204										500	4x100			1930
M9 600	301705										600	5x100			1900
V9 600	301205	44	22	9	1,2	28	M8	11	24	6,8	600	5x100	50	6,2	2316
M9 700	301706										700	6x100			2215
V9 700	301206										700	6x100			2703
M9 800	301707										800	7x100			2530
V9 800	301207										800	7x100			3089
M9 900	301708										900	8x100			2845
V9 900	301208										900	8x100			3476
M9 1000	301709										1000	9x100			3160
V9 1000	301209										1000	9x100			3862
M12 200	301801										200	1x100			1130
V12 200	301301										200	1x100			1224
M12 300	301802										300	2x100			1690
V12 300	301302										300	2x100			1836
M12 400	301803										400	3x100			2250
V12 400	301303										400	3x100			2448
M12 500	301804										500	4x100			2810
V12 500	301304										500	4x100			3060
M12 600	301805										600	5x100			3370
V12 600	301305	58	28	12	1,5	35,5	M10	15	33	8,5	600	5x100	50	8,2	3672
M12 700	301806										700	6x100			3930
V12 700	301306										700	6x100			4284
M12 800	301807										800	7x100			4490
V12 800	301307										800	7x100			4896
M12 900	301808										900	8x100			5050
V12 900	301308										900	8x100			5508
M12 1000	301809										1000	9x100			5610
V12 1000	301309										1000	9x100			6120

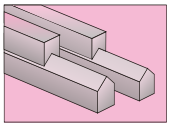

Tolerances and run-off accuracies

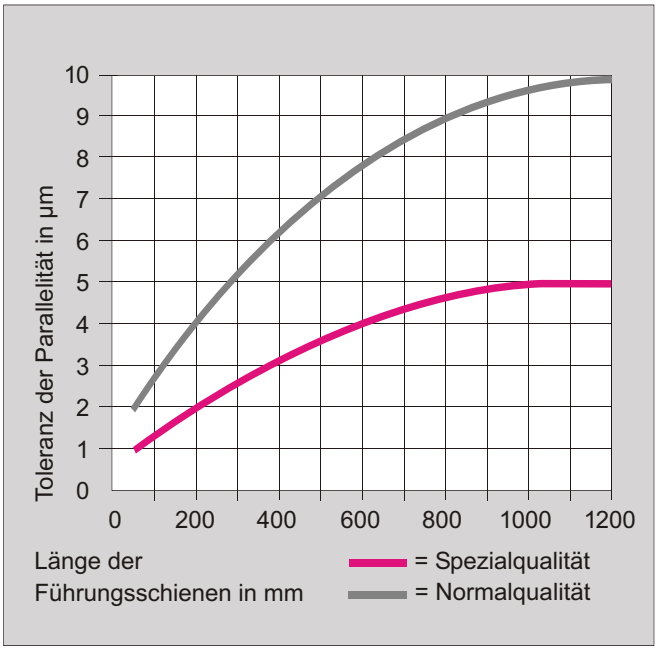

Run-off accuracy
The diagram shows the run-off accuracy of longitudinal guides as a function of the rail length. The tolerances are illustrated by the characteristics // △ A and // △ B.
The **"Guides" Division** should be consulted if special-quality guide rails are used.

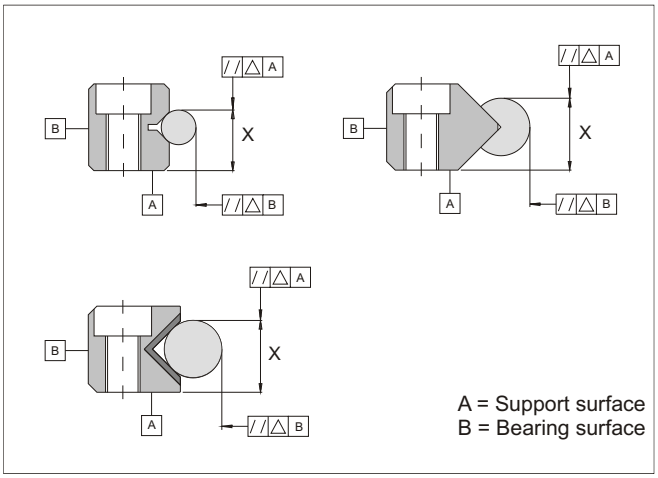

Manufacturing tolerances (guide surface/mounting surface)
The defined tolerance X describes the theoretical production deviation of the guide surface to the support surface A. The measurement is determined with test rollers. This defined dimension must particularly be taken into account when replacing longitudinal guides and when they are impacted.
In the event of impacts, we recommend that you regrind the guide rails as a set, i.e. in pairs.
When mounting longitudinal guides ground in pairs, use consecutive numbering.

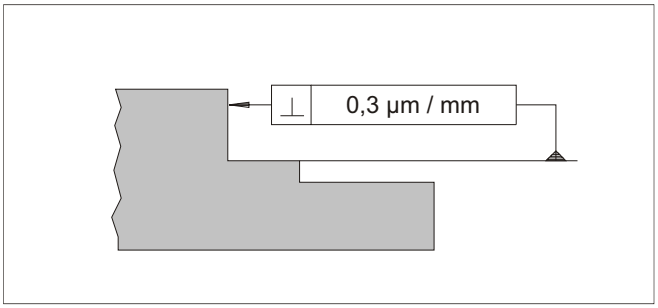

Tolerances for bearing and support surfaces
In order to achieve the IEF quality for guide systems, the measured values of the mounting surfaces must not exceed the defined tolerances for the rail sizes. The angle errors of the support surfaces must not be over 0.3 µm/mm.

Tolerances for mounting surfaces

Type R+K	Type N/O		Type M/V
max. tolerance			
Size 1	-	-	1,2 µm
Size 2	-	-	1,8 µm
Size 3	-	Size 3	2,4 µm
Size 6	Size 6	Size 6	4,5 µm
Size 9	Size 9	Size 9	6,6 µm
Size 12	-	Size 12	8,4 µm
Size 15	-	-	10,8 µm

Installation instructions

Important:
Observe the following when making the bearing and support surfaces:
The tolerances of the mounting surfaces Figure 1 (1), (2) and (3) must correspond to
the production tolerances of the longitudinal guides.
In order to achieve the required accuracy, these surfaces must be finely milled or
ground.
A finely-ground surface is

- If possible, all fastening holes in the support surfaces, Figure 1 (1), should be drilled in accordance with the fastening holes of the longitudinal guides. This enables possible tolerance deviations to be compensated for by way of the drilling gauge.
- In order to obtain a perfect support surface for the longitudinal guide, the burrs resulting from drilling must be carefully removed with a grinding
stone.
- Before installation, the rails must be thoroughly cleaned and lightly oiled. Here, we recommend a synthetic oil of the Klüber company, type Syntheso D32.
- When installing the longitudinal guides, ensure that the labelled side is not used as the
support surface.
- If longitudinal guides are installed which have been ground in pairs (in a set), pay attention to the consecutive number.
- During assembly, press the longitudinal guides, Figure 2 (I) against the bearing surface and tighten the fastening screws. Next, check the paral- lelity of the rails (I).
In this case, the tolerance of the dimensions A and B, Figure 3, must not exceed the values of the run-off accuracy of the longitudinal guide.
- Mounting the longitudinal guide, Figure 2 (II): Tighten the fastening screws only lightly.
- When inserting the cages with the rolling elements, Figure 2 (III), into the prefitted longitudinal guides, particular attention must be paid to ensure that the cages do not project when the longitudinal guides are in their end position.
- For every fastening screw, insert an adjustment screw, Figure 2 (IV) into the slide section. The threaded holes should be the same size in this case. The thread size of the adjustment screw can be found in the table.
- Use the adjustment screws, Figure 2 (IV) for play-free adjustment of the guide.
The play-free adjustment of the longitudinal guides can be performed more sensitively if the intrinsic weight of the slide sections is balanced out by lifting.
- Play-free adjustment of the longitudinal guides must be performed from the centre of the table, evenly alternating to the right and left.
Adjustment may only be performed where the cage is engaged.
Next, securely tighten the fastening screws of the guide rail, Figure 2 (II).
- Depending on the function of the guide, this must include pretensioning. This mainly depends on the rigidity of the structure. However, it must be noted that significant pretensioning impairs the load-bearing capacity and the service life.
- As a final inspection, check the completely adjusted guide for freedom from play and run-off accuracy.
If the required accuracy is not achieved, the mounting surfaces must be reworked.

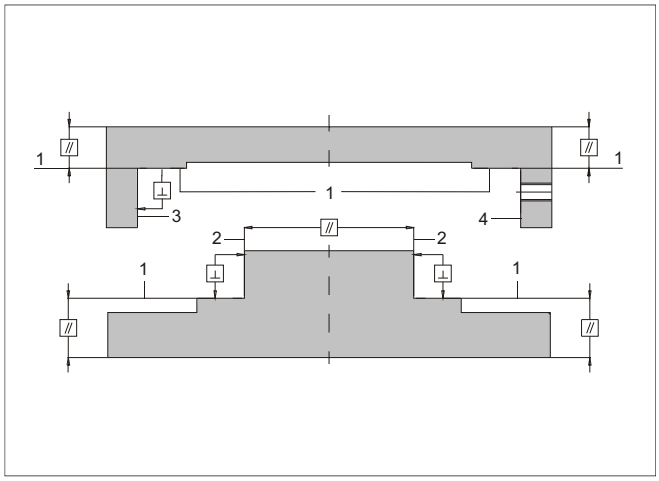

Figure 1

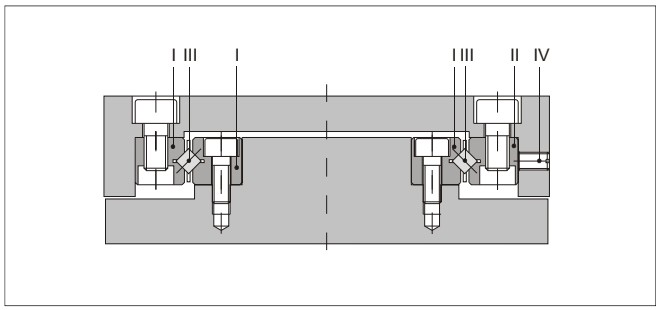

Figure 2

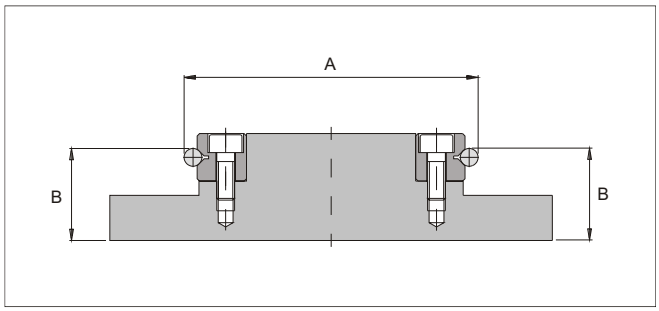

Figure 3

Determining the adjustment screw size

Type R+K	Type N/O	Type M/V	Adjustment
screw			
Size 1	-	-	M2
Size 2	-	-	M3
Size 3	-	Size 3	M4
Size 6	Size 6	Size 6	M6
Size 9	Size 9	Size 9	M8
Size 12	-	Size 12	M10
Size 15	-	-	M12

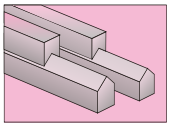

Calculation for the anti-friction slideways

Type R+K, N/O
The dimensioning of longitudinal guides is significantly influenced by the load and stroke parameters.
The rail size, rail length and number of rolling elements are calculated from this.
The mean spacing of the rails (cage spacing) **KA** should not be greater than the supporting length of the longitudinal guide (cage length) **KL**.
The purpose of the task is to keep the rolling elements at a defined spacing. This spacing is designated pitch **T** below.
The pitch **T** of the various rolling elements and also the sizes can be found in the table on Page 8/9 for type R+K and in the table on Page 11 for Type N/O.
The guide rails should guide the cage along the entire length. The cage always covers half the distance of the moving rails. The starting point for dimensioning of the rail pairs should always be

Determining the rail length SL_1
The ratio **stroke (B)** to rail length **SL_1** is formed to determine the rail length.
This ratio should be in the range of 1:1.5 to 1:2.

Determining the cage length KL

$$KL = SL_1 - \frac{B}{2}$$

Determining the number of rolling elements n per cage
The number **n** of rolling elements is determined by the ratio of the cage length **KL** to the pitch **T**.

$$n = \frac{KL}{T} - 1 \text{ (rounded up to a whole number)}$$

Determining the number of supporting rolling elements
when using 2 cages, i.e. for one slide guide

Roller **R**	Ball **K** and needle **N**
Number = $\frac{n \times 2 \text{ (cages)}}{2}$	**Number = n x 2 cages**

Determining the load-bearing capacity F of a slide guide
The load-bearing capacity **F** of a rail guide is determined from the number of supporting rolling elements and the load-bearing capacity per rolling element.

F = Number x load-bearing capacity C per roller

Important: No pretensioning was taken into account here

(Determining the load-bearing capacity C per roller, see Page 8)

Calculation formula

The values for this calculation are:
Guide type: With roller bearings (size 3); stroke (B) 150 mm; pitch P 5 mm (see Page 8); load-bearing capacity C per roller 130 N (see Page 8).

Ratio B (stroke) to the rail length SL_1

$$= \frac{B}{SL_1} = \frac{1}{1{,}5} \text{ to } \frac{1}{2} = \frac{150}{225} \text{ to } \frac{150}{300}$$

selected rail length (according to the table on Page 6) 275 mm, Type R3 275

$$KL = 275 \text{ mm} - \frac{150 \text{ mm}}{2} = 200 \text{ mm}$$

$$n = \frac{200}{5} - 1 = 39$$

$$\text{Number of supporting rollers} = \frac{39 \times 2 \text{ (cages)}}{2}$$

Load-bearing capacity of the slide guide

F = 39 x 130 N = 5070 N

This numerical value takes into account no safety reserves

Dimensioning example

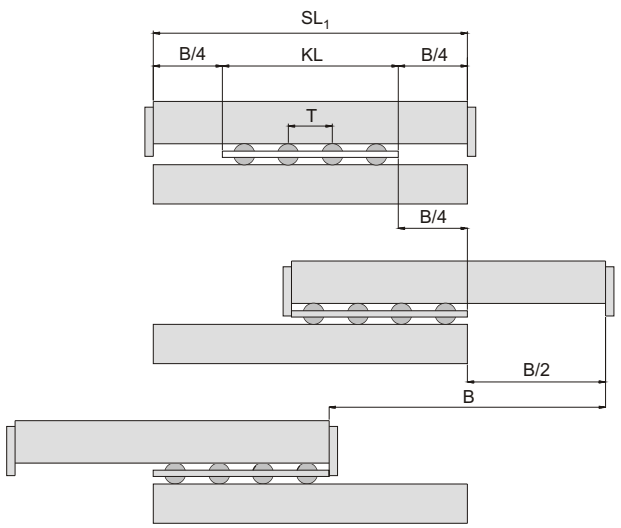

Cage position

Calculation for the standard slideways

Type M/V
In order to obtain good guiding performance, particularly for tilting and torque load, the following rules must be observed: The rail lengths $\mathbf{L_M}$ of the M-rail should be at least 1.5 x the guide spacing **FA**. The rail length $\mathbf{L_v}$ of the V-rail should correspond to the length of the M-rail plus the stroke B.

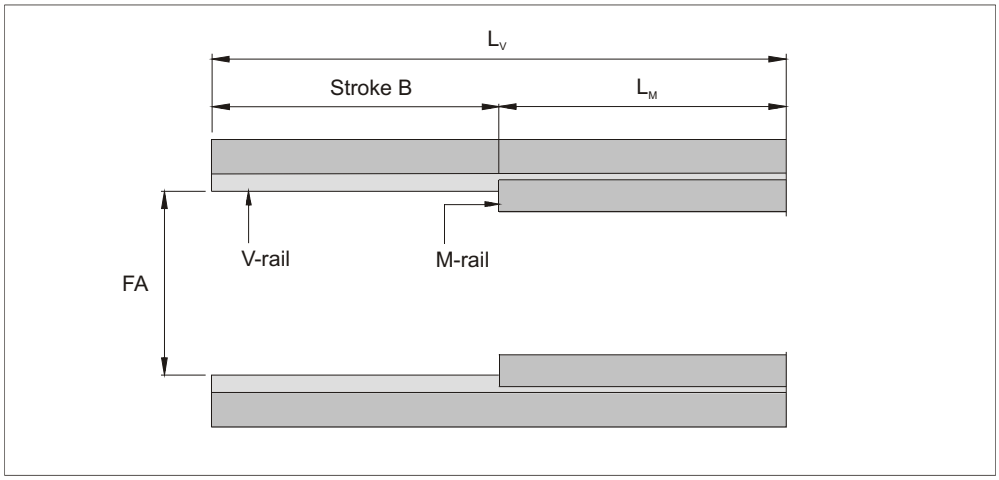

Guide ratio

Load-bearing capacity of the M/V guide
The figures on this page show the load as a function of the installation position and loading direction of the guide rails:
(Fig. 1) The rail pair can be operated with max. the load **F** when the guide is used.
A guide system is normally realised with two rail pairs, so that the max. load increases to twice **F**.
(Fig. 2) When the guide is used, the rail pair can be operated with max. the load 2 x **F**.
Caution: In this operating mode, the second rail pair does not contribute towards the load-bearing capacity of the guide system, so that here too, the max. load is 2 x **F**.

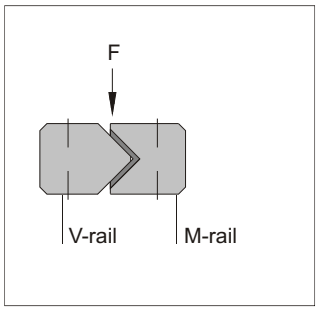

Figure 1

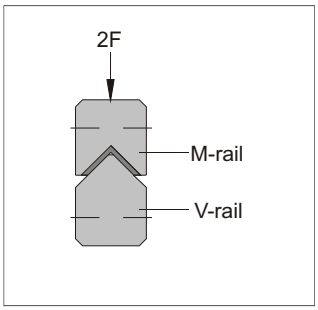

Figure 2

Maximum permissible load-bearing capacity F per mm rail length

Rail size	dynamic	static
3	0,9 N/mm	4,5 N/mm
6	2,1 N/mm	10,5 N/mm
9	4,0 N/mm	20 N/mm

The table shows the maximum load-bearing capacity per mm rail length for static and dynamic loads.

Calculating the length L_M of the of the M-rail of a complete slide guide

$$L_M = \frac{\text{Load F [N]}}{\text{Load-carrying capacity [N/mm] x 2}}$$

Calculating the guide spacing FA

$$FA \leq \frac{L_M\ [mm]}{1{,}5}$$

Calculating the length L_V of the V-rail

$$L_V = L_M + \text{Stroke (B)}$$

Calculation formula

The requirements for this calculation are:
Stroke (B) 100 mm; load 200 N; rail size 6.

$$L_M = \frac{200\ N}{2{,}1\ N/mm \times 2} = 47{,}6\ mm$$

selected rail length L_M (according to table on Page 12) 100 mm, Type M6 100

$$FA \leq \frac{100\ mm}{1{,}5} \leq 66{,}6\ mm$$

L_V = 100 mm + 100 mm = 200 mm

selected rail length L_v (according to table on Page 12) 200 mm, Type V6 200

Dimensioning example

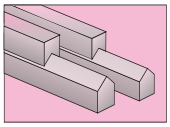

Lubrication

The lubrication performs several functions in a guide system. The lubrication mainly protects the guide system from corrosion and reduces wear. Other properties of lubricants can be noise reduction and improving the damping properties. A distinction is generally made between **grease lubrication** and **oil lubrication**. However, guide systems should not be excessively lubricated (grease lubrication) so as not to impair the rolling-off of the rolling elements.

Depending on the load and the ambient conditions (temperature, humidity, dirt etc.), lubrication of rolling bearings can last for several years. However, it must generally be ensured that cutting oils or water-soluble cooling lubricants are kept away from the guide systems, since these dilute or wash out the lubricants.
Cooling lubricants tend to stick when they dry out.
In general, great care must be taken when lubricating guide systems in order to prevent contamination by foreign particles (chips, dust etc.).
When lubrication connections are used, the lubricant is normally applied between the longitudinal guides. If access is not guaranteed due to the design or vertical installation, special lubrication holes can be made in the longitudinal guides, particularly the **M/V longitudinal guides**. However, your IEF specialist should be consulted in this case.
Special lubricants are available, depending on the application and guide system (anti-friction slideways, standard slideways).

Anti-friction slideways
When using anti-friction slideways based on ball **K**, cross roller **R** or needle guides **N**, we recommend a synthetic oil, type **Syntheso D32**, made by the Klüber company, for the oil lubrication.
One particularly beneficial property of this lubricant is its good bonding capacity.
In the case of grease lubrication, lithium soap-based rolling bearing greases conforming to DIN 51502 and 51825 should be used to lubricate the longitudinal guides. Under normal operating conditions, it is usually sufficient to lightly oil or grease the longitudinal guides during assembly.

Standard slideways
The plastic-coated longitudinal guide has good emergency running properties and, de-pending on the application, is suitable for dry running. In order to improve efficiency (friction, wear etc.), we recommend lubrication of the longitudinal guides at regular intervals. In the case of plastic-coated longitudinal guides such as **M/V longitudinal guides**, we recommend the slideway oil **Tonna TX ISO VG 220** from the Shell company. Maintenance intervals must be adapted to the operational conditions. Ideally, we recommend connection to a central lubrication unit.
The lubrication quantity depends significantly on the slide size, the load and the travel speed.
The longitudinal guides are available with different types of lubrication grooves and lubrication pockets.

Slides
The dovetail guide occupies a special position amongst slideway systems. In this case, the slide sections (GG 25) slide directly on each other.
Dovetail slide guides, from size 75 upwards, always have lubrication grooves and, on both sides, lubrication nipples.
The guides are lubricated at the factory with the special grease Mobilux 2 from the Mobil company.

Technical Instructions

Materials
The longitudinal guides are made of tool steel, e.g. material No. 1.2842, as standard. The longitudinal guides **Type R, V and N/O** are made with a material hardness of 58 to 62 HRC.
The plastic-coated longitudinal guide **Type M** is not harde-ned.

Operating temperature
The longitudinal guides can be used at operating temperatures up to + 80 degrees C. In the case of slideways **Type M/V**, it may be necessary to adjust the guide play to the operating temperatures.

Covers
The longitudinal guides must be protected against all effects of dirt in both solid and liquid
form. Any type of impurity will greatly impair the running properties and service life of the longitudinal guide and can cause failure.
Never use compressed air to clean in the vicinity of longitudinal guides. Depending on the application, suitable seals or covers must be provided.

Installation
A distinction is always made between two installation types. Horizontal installation refers to all applications whose movement direction runs horizontally.
Vertical installation refers to all applications whose movement direction deviates from the horizontal direction.

Securing the longitudinal guides
The longitudinal guides can be fastened by using threaded holes or the through-holes,
depending on the application and connection design.
Here, the accessibility to the guide play adjustment should not be ignored.

The connection design must be adapted to the requirements of the guide system. Rigid designs with high shape accuracy must be provided here. The evenness, shape and position tolerances of the connection structure must at least correspond to those of the longitudinal guides.

Load bearing capacity and service life of anti-friction slideways:
The loads occurring in relationship to the load ratings are crucial to the dimensioning of the guide.
The load rating C is the load at which a nominal service life of 100,000 m travel is obtained. In this case, the load referred to the size and direction must not change and the action line must act perpendicular onto the guide unit.
The nominal service life of a rolling bearing guide is calculated as follows:

Calculation of the service life for longitudinal guides with rollers R and needle N

$$L = \left(\frac{C_{dyn}}{P}\right)^{\frac{10}{3}} \times 100$$

Calculation of the service life for longitudinal guides with ball K

$$L = \left(\frac{C_{dyn}}{P}\right)^{3} \times 100$$

L = nom. service life [km]
C_{dyn} = dyn. load rating [N]
P = load [N]

$$L_h = \frac{L \times t}{H \times 3600} \quad [h]$$

L_h = service life [h]
t = time for stroke [sec]
H = single stroke [km]

Calculation formula

The resulting values of the equations shown are based on a 90% occurrence probability.

The load bearing capacity C can be reduced by external in-fluences such as reduced sli-deway hardness and increased temperature.
It is necessary here to take into account special correction factors.

General care
Longitudinal guides are sensitive to impacts and dirt. During the transport, storage, assembly and operation, appropriate precautions must be taken to avoid such causes of damage.
Faulty covers must be replaced immediately.
The longitudinal guides must be suitably cleaned before installation, checked for any damage and treated in accordance with the lubricating instructions. Deliveries must be inspected immediately upon arrival with respect to quantity, type, quality and properties. Complaints can be accepted no more than 5 days after receipt by the customer. Reworked or converted articles may not be exchanged under any circumstances.

Slides

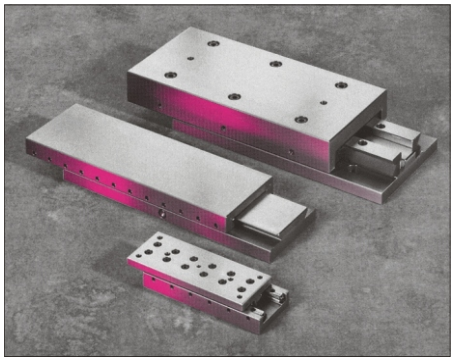

Type O

Main characteristics:
- Open design (without end plates)
- Same length of outside and inside slide part
- Different guide types possible; roller **RO**, ball **KO**, needle **NO**, plastic-coated slideways **TVO**, dovetail **SO**
- Version made of GG25, AL natural anodised if required
- Standard and customer-spe-cific hole patterns
- T-grooves, clamp if required

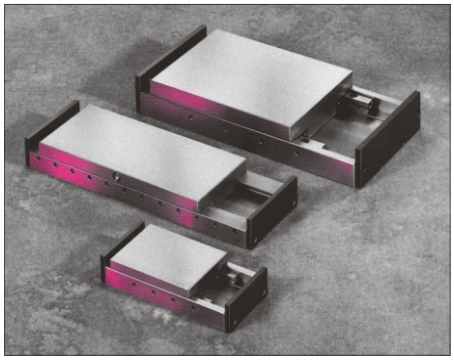

Type E

Main characteristics:
- Slides with end plates
- Different guide types possible; roller **RE**, ball **KE**, needle **NE**, plastic-coated slideways **TVE**, dovetail **SE**
- Version made of GG25, AL natural anodised if required
- Standard and customer-spe-cific hole patterns
- T-grooves, clamp, cover, scraper if required

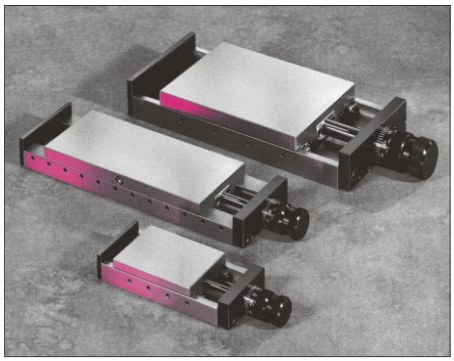

Type M

Main characteristics:
- Adjustment slide with micrometer knob
- Precision sliding spindle
- Different guide types possible; roller **RM**, ball **KM**, needle **NM**, plastic-coated slideways **TVM**, dovetail **SM**
- Version made of GG25, AL natural anodised if required
- Standard and customer-spe-cific hole patterns
- T-grooves, clamp, cover, scraper if required

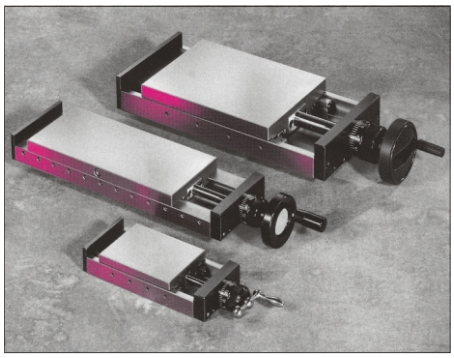

Type H

Main characteristics:
- Adjustment slide with crank and hand wheel
- Precision sliding spindle
- Different guide types possible; roller **RH**, ball **KH**, needle **NH**, plastic-coated slideways **TVH**, dovetail **SH**
- Version made of GG25, AL natural anodised if required
- Standard and customer-spe-cific hole patterns
- T-grooves, clamp, cover, scraper if required

What you should know...
If longitudinal guides are used in a complete guide system, this is referred to as a slide unit or, for short, a slide.
A slide normally consists of a slide outer section and a slide inner section which can be moved against each other by the guide system.
The travel (stroke) of the slide can be limited by several factors. The end plates are one factor.
If these are not present, e.g. as with type O, the stroke is determined by the cage length if longitudinal guides are used and by the minimum length of the longitudinal guides (load-dependent) if slideways are used.
Complete slides have the advantage that no construction work has to be done to fit the longitudinal guides, so that the designer can concentrate on the connection system. This saves time and cost-inten-sive production parts.

Designs
A wide range of IEF slides are available, depending on requirements. A distinction is generally made between the following types:

Type O is the designation of slides of an **o**pen design: This means without end plate. A significant factor is that the slide outer sections and the slide inner sections are of the same length.
This offers the designer great freedom, which allows optimum integration of the slide into the overall design.

Type E refers to slides with fitted **e**nd plates. The stroke is calculated from the difference between the length of the outer section (C) and the length of the inner section (D).
The end plates allow the subsequent installation of shock absorbers, cylinders, measurement systems, initiators etc.

Type M refers to slides with **m**icrometer knobs and a precision sliding spindle for fine adjustment.

Type H refers to slides with a **h**and crank with a vernier and precision sliding spindles for accurate and rapid adjustment.

All slide types can be equipped with different longitudinal guide types. This gives the following variants:

- Roller **RO**, **RE**, **RM**, **RH**
- Ball **KO, KE, KM, KH**
- Needle **NO, NE, NM, NH**
- Plastic-coated sliding guides **TVO, TVE, TVM, TVH**
- Dovetail guides **SO, SE, SM, SH**

Standard slides are made of grey cast iron GG25.
If required, the slides are also chemically nickel-plated or are available in an AL natural anodised version. Standard hole patterns, T-grooves, clamps, covers and scrapers are also available.
Complex, multi-axle systems can be constructed with the aid of mounting brackets. Customer-specific assembly hole patterns guarantees simple adaptation to the connection design.

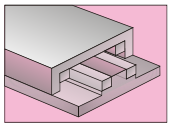

Type O

Slides of **Type O** are complete guide units in an **o**pen design, i.e. without end plates as a stroke limiter.
The length of the slide outer section and the slide inner section is the same (length C). The advantage of the open slide is its long stroke in relation to the relatively short basic slide length, with an appropri-ate load-bearing capacity.
The stroke is realised by the overtravel of the basic slide length in the relevant direction.

The slides are used in machining, movement and positioning tasks.
They can be used either horizontally or vertically (note when ordering).
The slides are fitted with type HVK cages.
The slide sections are made of grey cast iron GG25 and can be chemically nickel-plated if required.
AL anodised is possible as an alternative.
The outer surfaces of the standard slides are ground.

Standard hole patterns, T-grooves, clamps, mounting brackets, covers and scrapers for many different uses and applications are available as options and accessories.
If the open slides are used, a suitable dirt cover is necessary, depending on the application.

Ordering example:
The order designation consists of:

RO 100.310.100.
Type
Width A
Length C
Stroke B
and: Article No. 341013

Width A	Length AT C	B	Stroke E	Height E1	T-groove J	M	N1
50	105	75	25	37	M3/Km4	25	15
50	155	125					
50	180	150					
50	230	175					
75	105	75	32	44	M3/Km4	25	15
75	155	125					
75	205	150					
75	255	175					
75	280	200					
75	305	250					
100	160	50	42	54	M5/Km6	50	30
100	210	150					
100	310	200					
100	410	250					
100	510	300					
150	210	150	50	66	M5/Km6	50	30
150	310	200					
150	460	250					
150	510	300					
150	710	400					
200	310	100	58	74	M6/Km8	100	55
200	410	250					
200	610	400					
200	710	500					
200	810	600					
200	1010	750					
300	410	250	75	93	M6/Km8	100	55
300	610	400					
300	710	500					
300	810	600					
300	1010	750					

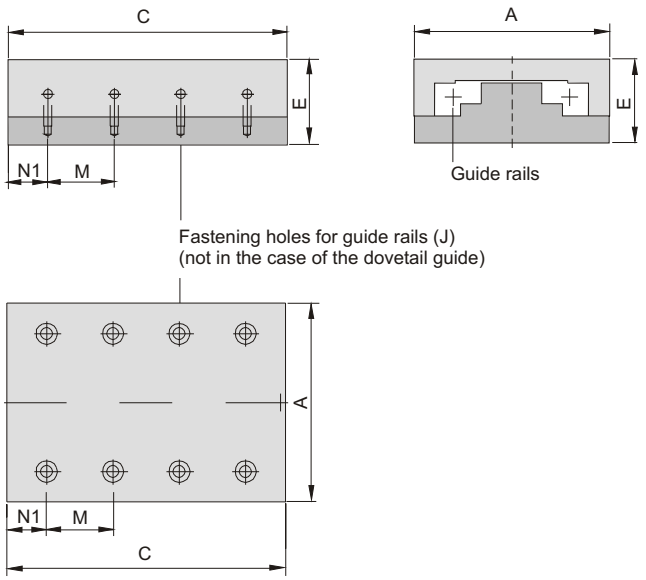

The slides **Type O** are available with the following guide types:

Type RO = roller guide
Type KO = ball guide
Type TVO = plastic-coated guide rail
Type NO = needle guide
Type SO = dovetail guide

Guides, type O

Rail size	Weight [kg]	(S)	Type RO Article No.	Type KO Article No.	Type TVO* Article No.	Type NO Article No.	Type SO Article No.
3	0,9	1,0	341001	345201	340001	-	342001
	1,3	1,5	341002	345202	340002	-	342002
	1,6	1,8	341003	345203	340003	-	342003
	2,0	2,3	341004	345204	340004	-	342004
3	1,8	2,0	341005	345205	340005	-	342005
	2,6	2,9	341006	345206	340006	-	342006
	3,5	3,9	341007	345207	340007	-	342007
	4,3	4,8	341008	345208	340008	-	342008
	4,8	5,3	341009	345209	340009	-	342009
	5,2	5,7	341010	345210	340010	-	342010
6	4,5	5,9	341011	345211	340011	347011	342011
	7,0	7,0	341012	345212	340012	347012	342012
	10,0	10,0	341013	345213	340013	347013	342013
	13,0	14,0	341014	345214	340014	347014	342014
	16,0	17,0	341015	345215	340015	347015	342015
6	12,0	12,0	341016	345216	340016	347016	342016
	17,0	18,0	341017	345217	340017	347017	342017
	26,0	27,0	341018	345218	340018	347018	342018
	29,0	30,0	341019	345219	340019	347019	342019
	39,0	42,0	341020	345220	340020	347020	342020
9	26,0	29,0	341021	-	340021	347021	342021
	35,0	37,0	341022	-	340022	347022	342022
	52,0	56,0	341023	-	340023	347023	342023
	61,0	65,0	341024	-	340024	347024	342024
	70,0	74,0	341025	-	340025	347025	342025
	87,0	92,0	341026	-	340026	347026	342026
9	70,0	72,0	341027	-	340027	347027	342027
	104,0	108,0	341028	-	340028	347028	342028
	121,0	125,0	341029	-	340029	347029	342029
	138,0	143,0	341030	-	340030	347030	342030
	173,0	178,0	341031	-	340031	347031	342031

**The information on loads can be found on Page 32*

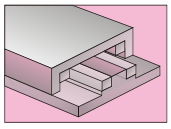

Type E

The Type E guides are co plete guide units with end plates.
The stroke is limited by the end plates and is obtained from the difference between the length of the outer section C and the length of the inner section D. The end plates allow (also subsequent) attachment of cylinders, pushbuttons, stops or the user-specific attachment of another drive.
These guides are used for machining, movement and positioning tasks.
They can be used horizontally or vertically (state requirement when ordering). The slides are fitted with type HVK cages.
The slide sections are made of grey cast iron GG25 and can be chemically nickel-plated if required.
AL anodised is possible as an alternative. The outer surfaces of the standard slides are ground.
Standard hole patterns, T-grooves, clamps, mounting brackets, covers and scrapers for many different uses and applications are available as options and accessories.

Ordering example:
The order designation consists of:

RE 100.310.100.
Type
Width A
Length C
Stroke B
and: Article No. 341113

Width A	Lenght AT C	B	Stroke D	Length E	IT E1	Height LE	T-groove G1	Length AT J	M	N1	N2	(TVE)
50	105	25	80	25	37	117	6	M3/Km4	25	15	27,5	15
50	155	50	105			167					40	15
50	180	75	105			192					52,5	15
50	230	100	130			242					65	15
75	105	25	80	32	44	117	6	M3/Km4	25	15	27,5	15
75	155	50	105			167					40	15
75	205	75	130			217					52,5	15
75	255	100	155			267					65	15
75	280	125	155			292					77,5	15
75	305	150	155			317					90	15
100	135	25	110	42	54	147	6	M5/Km6	50	30	42,5	42,5
100	210	50	160			222					55	30
100	310	100	210			322					80	30
100	410	150	260			422					105	30
100	510	200	310			522					130	30
150	210	50	160	50	66	226	8	M5/Km6	50	30	55	30
150	310	100	210			326					80	30
150	460	150	310			476					105	30
150	510	200	310			526					130	30
150	710	250	460			726					155	30
200	260	50	210	58	74	276	8	M6/Km8	100	55	80	80
200	410	100	310			426					105	55
200	610	200	410			626					155	55
200	710	300	410			726					205	55
200	810	400	410			826					255	55
200	1010	500	510			1026					305	55
300	410	100	310	75	93	430	10	M6/Km8	100	55	105	55
300	610	200	410			630					155	55
300	710	300	410			730					205	55
300	810	400	410			830					255	55
300	1010	500	510			1030					305	55

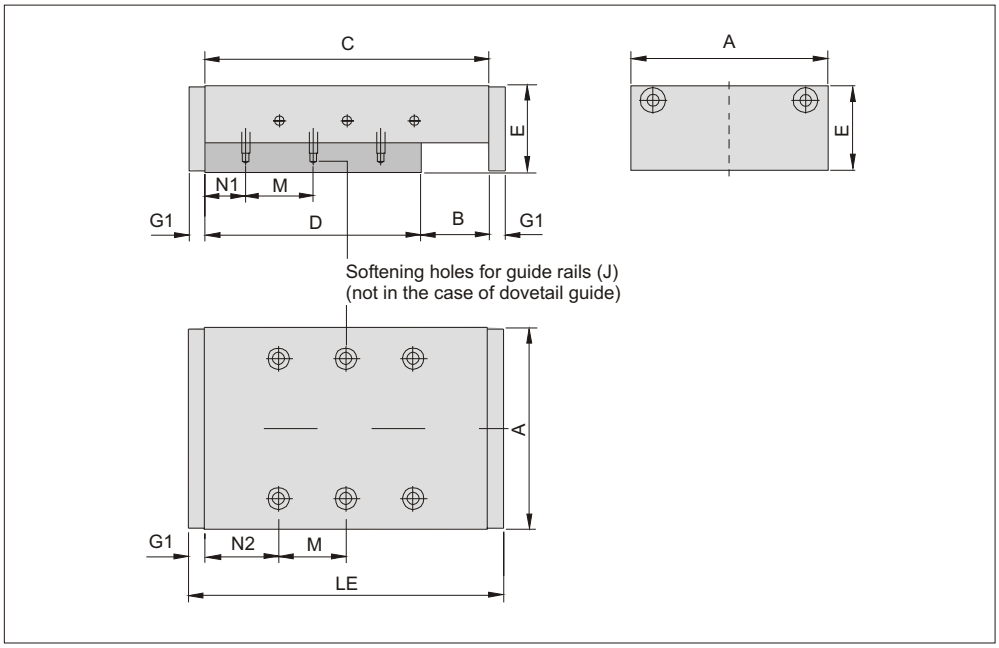

The slides Type E are available with the following guide types:

Typ RE = roller guide
Typ KE = ball guide
Typ TVE = plastic-coated guide rail
Typ NE = needle guide
Typ SE = dovetail guide

Guides, type E

Rail size	Weight [kg] (S)	Type RE Article No.	Type KE Article No.	Type TVE* Article No.	Type NE Article No.	Type SE Article No.
3	0,9 1,0	341101	345301	340101	-	342101
	1,2 1,3	341102	345302	340102	-	342102
	1,3 1,4	341103	345303	340103	-	342103
	1,6 1,9	341104	345304	340104	-	342104
3	1,7 1,9	341105	345305	340105	-	342105
	2,3 2,6	341106	345306	340106	-	342106
	2,9 3,3	341107	345307	340107	-	342107
	3,5 4,0	341108	345308	340108	-	342108
	3,7 4,2	341109	345309	340109	-	342109
	3,9 4,4	341110	345310	340110	-	342110
6	4,0 4,0	341111	345311	340111	347111	342111
	6,0 7,0	341112	345312	340112	347112	342112
	8,0 9,0	341113	345313	340113	347113	342113
	10,0 11,0	341114	345314	340114	347114	342114
	12,0 14,0	341115	345315	340115	347115	342115
6	11,0 11,0	341116	345316	340116	347116	342116
	14,0 15,0	341117	345317	340117	347117	342117
	21,0 22,0	341118	345318	340118	347118	342118
	22,0 24,0	341119	345319	340119	347119	342119
	31,0 33,0	341120	345320	340120	347120	342120
9	21,0 22,0	341121	-	340121	347121	342121
	31,0 33,0	341122	-	340122	347122	342122
	43,0 46,0	341123	-	340123	347123	342123
	46,0 50,0	341124	-	340124	347124	342124
	49,0 53,0	341125	-	340125	347125	342125
	60,0 66,0	341126	-	340126	347126	342126
9	63,0 66,0	341127	-	340127	347127	342127
	86,0 91,0	341128	-	340128	347128	342128
	92,0 98,0	341129	-	340129	347129	342129
	99,0 106,0	341130	-	340130	347130	342130
	122,0 131,0	341131	-	340131	347131	342131

**The information on loads can be found on Page 32*

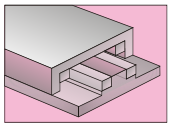

Type M

Slides of **Type M** are complete guide units with a **mi**crometer knob which allows sensitive positioning of the guide unit.
The stroke is obtained from the difference of the length of the outer section C to the length of the inner section D and is limited by the end plates.

The guides have a sliding spindle, the spindle nut of which is installed in the inner section. These are hardened and ground as standard.
Their pitch accuracy is ± 0.02 mm on a 300 mm stroke.
The slides are used in machining, movement and positioning tasks. They can be used horizontally or vertically (note when ordering).
The slides are fitted with type HVK cages.
The slide sections are made of grey cast iron GG25 and can be chemically nickel-plated if required.
AL anodised is possible as an alternative.
The outer surfaces of the standard slides are ground.
Standard hole patterns, T-grooves, clamps, mounting brackets, covers and scrapers for various uses and applica-tions are available as

Ordering example:
The order designation consists of:

RM 100.310.100.
Type
Width A
Length C
Stroke B
and: Article No. 341213

Width A	Length AT C	Stroke B	Length IT D	Height E	T-groove E1	L	LM	LE	G1	G2	H	J	M	N1	N2	(TVM)	I
50	105	25	80	25	37	42	167	125	6	14	12,5	M3/Km4	25	15	27,5	15	24
50	155	50	105				217	175							40	15	
50	180	75	105				242	200							52,5	15	
50	230	100	130				292	250							65	15	
75	105	25	80	32	44	47	173	126	6	15	16	M3/Km4	25	15	27,5	15	31
75	155	50	105				223	176							40	15	
75	205	75	130				273	226							52,5	15	
75	255	100	155				323	276							65	15	
75	280	125	155				348	301							77,5	15	
75	305	150	155				373	326							90	15	
100	135	25	110	42	54	49	205	156	6	15	18	M5/Km6	50	30	42,5	42,5	35
100	210	50	160				280	231							55	30	
100	310	100	210				380	331							80	30	
100	410	150	260				480	431							105	30	
100	510	200	310				580	531							130	30	
150	210	50	160	50	66	70	304	234	8	16	24,3	M5/Km6	50	30	55	30	48
150	310	100	210				404	334							80	30	
150	460	150	310				554	484							105	30	
150	510	200	310				604	534							130	30	
150	710	250	460				804	734							155	30	
200	260	50	210	58	74	70	354	284	8	16	28,3	M6/Km8	100	55	80	80	48
200	410	100	310				504	434							105	55	
200	610	200	410				704	634							155	55	
200	710	300	410				804	734							205	55	
200	810	400	410				904	834							255	55	
200	1010	500	510				1104	1034							305	55	
300	410	100	310	75	93	99	539	440	10	20	35	M6/Km8	100	55	105	55	68
300	610	200	410				739	640							155	55	
300	710	300	410				839	740							205	55	
300	810	400	410				939	840							255	55	
300	1010	500	510				1139	1040							305	55	

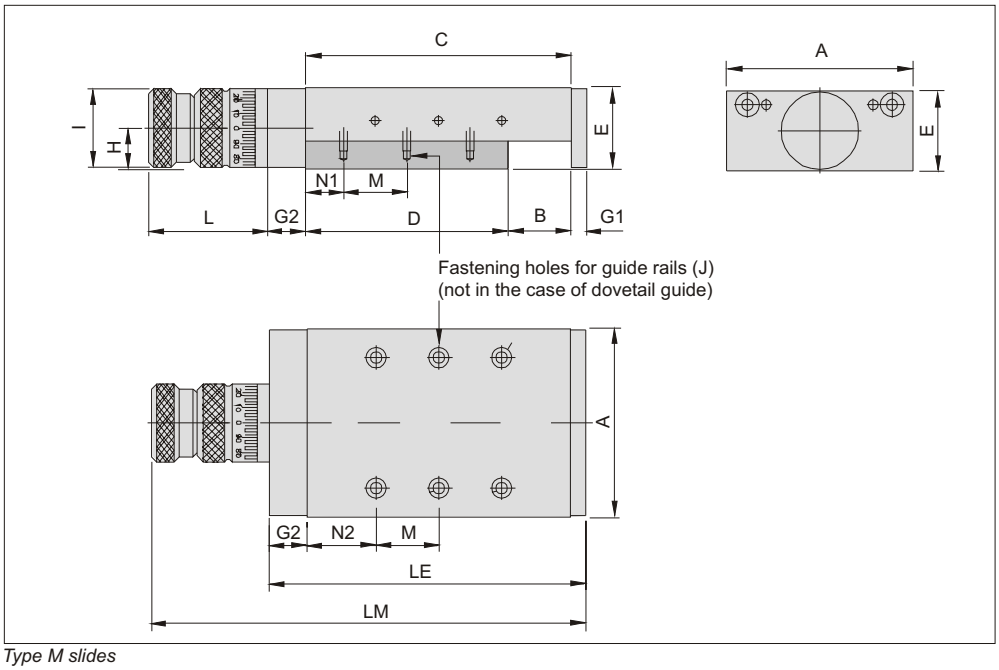

Type M slides

The slides **Type M** are available with the following guide types:

Type RM = roller guide
Type KM = ball guide
Type TVM = plastic-coated guide rail
Type NM = needle guide
Type SM = dovetail guide

Rail size SM	Read-off		Weight [kg]		Type RM	Type KM		Type TVM*	Type NM	Type
	accuracy	Spindle		(SM)	Article No.	Article No.	Article No.	Article No.	Article No.	
3	0,02	M6x1	1,0	1,1	341201	345401	340201	-	342201	
			1,3	1,4	341202	345402	340202	-	342202	
			1,3	1,5	341203	345403	340203	-	342203	
			1,6	2,0	341204	345404	340204	-	342204	
3	0,02	M8x1	1,9	2,1	341205	345405	340205	-	342205	
			2,5	2,8	341206	345406	340206	-	342206	
			3,1	3,5	341207	345407	340207	-	342207	
			3,7	4,2	341208	345408	340208	-	342208	
			3,9	4,4	341209	345409	340209	-	342209	
			4,1	4,6	341210	345410	340210	-	342210	
6	0,02	M12x1	4,0	5,0	341211	345411	340211	347211	342211	
			6,0	7,0	341212	345412	340212	347212	342212	
			8,0	9,0	341213	345413	340213	347213	342213	
			11,0	12,0	341214	345414	340214	347214	342214	
			13,0	14,0	341215	345415	340215	347215	342215	
6	0,02	M20x1	11,0	12,0	341216	345416	340216	347216	342216	
			15,0	16,0	341217	345417	340217	347217	342217	
			21,0	23,0	341218	345418	340218	347218	342218	
			22,0	24,0	341219	345419	340219	347219	342219	
			31,0	34,0	341220	345420	340220	347220	342220	
9	0,02	M20x1	22,0	23,0	341221	-	340221	347221	342221	
			32,0	34,0	341222	-	340222	347222	342222	
			43,0	47,0	341223	-	340223	347223	342223	
			46,0	50,0	341224	-	340224	347224	342224	
			49,0	54,0	341225	-	340225	347225	342225	
			61,0	67,0	341226	-	340226	347226	342226	
9	0,02	TR26x2	64,0	68,0	341227	-	340227	347227	342227	
			88,0	93,0	341228	-	340228	347228	342228	
			94,0	100,0	341229	-	340229	347229	342229	
			100,0	108,0	341230	-	340230	347230	342230	

**The information on loads can be found on Page 32*

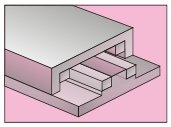

Type H

The slides **Type H** are complete guide units with a **h**and crank or **h**and wheel which allows rapid adjustment of longer strokes.
The stroke is obtained from the difference between the length of the outer section C to the length of the inner section D and is limited by the end plates.

The guides have a sliding spin-dle, the spindle nut of which
is installed in the inner section.
These are hardened and ground as standard. Their pitch accuracy is ± 0.02 mm on a 300 mm stroke.
The slides are used in machining, movement and positioning tasks. They can be used horizontally or vertically (note when ordering).

The slides are fitted with type HVK cages.
The slide sections are made of grey cast iron GG25 and can be chemically nickel-plated if
required.
AL anodised is possible as an alternative.
The outer surfaces of the stan-dard slides are ground.
Standard hole patterns, T-grooves, clamps, mounting brackets, covers and scrapers for various uses and applications are avai-lable as options

Ordering example:
The order designation consists of:

RH 100.310.100.
Type
Width A
Length C
Stroke B
and: Article No. 341313

Width A	Length AT C	Stroke B	Length IT D	Height E	T-groove E1	K	LK	Length AT LE	G1	G2	H	J	M	N1	N2	(TVH)	I	I1
50	105	25	80	25	37	60	185	125	6	14	12,5	M3/Km4	25	15	27,5	15	24	50
50	155	50	105				235	175							40	15		
50	180	75	105				260	200							52,5	15		
50	230	100	130				310	250							65	15		
75	105	25	80	32	44	70	196	126	6	15	16	M3/Km4	25	15	27,5	15	31	56
75	155	50	105				246	176							40	15		
75	205	75	130				296	226							52,5	15		
75	255	100	155				346	276							65	15		
75	280	125	155				371	301							77,5	15		
75	305	150	155				396	326							90	15		
100	135	25	110	42	54	80	236	156	6	15	18	M5/Km6	50	30	42,5	42,5	35	51
100	210	50	160				311	231							55	30		
100	310	100	210				411	331							80	30		
100	410	150	260				511	431							105	30		
100	510	200	310				611	531							130	30		
150	210	50	160	50	66	116	350	234	8	16	24,3	M5/Km6	50	30	55	30	48	80
150	310	100	210				450	334							80	30		
150	460	150	310				600	484							105	30		
150	510	200	310				650	534							130	30		
150	710	250	460				850	734							155	30		
200	260	50	210	58	74	131	415	284	8	16	28,3	M6/Km8	100	55	80	80	48	100
200	410	100	310				565	434							105	55		
200	610	200	410				765	634							155	55		
200	710	300	410				865	734							205	55		
200	810	400	410				965	834							255	55		
200	1010	500	510				1165	1034							305	55		
300	410	100	310	75	99	168	608	440	10	20	35	M6/Km8	100	55	105	55	68	125
300	610	200	410				808	640							155	55		
300	710	300	410				908	740							205	55		
300	810	400	410				1008	840							255	55		
300	1010	500	510				1208	1040							305	55		

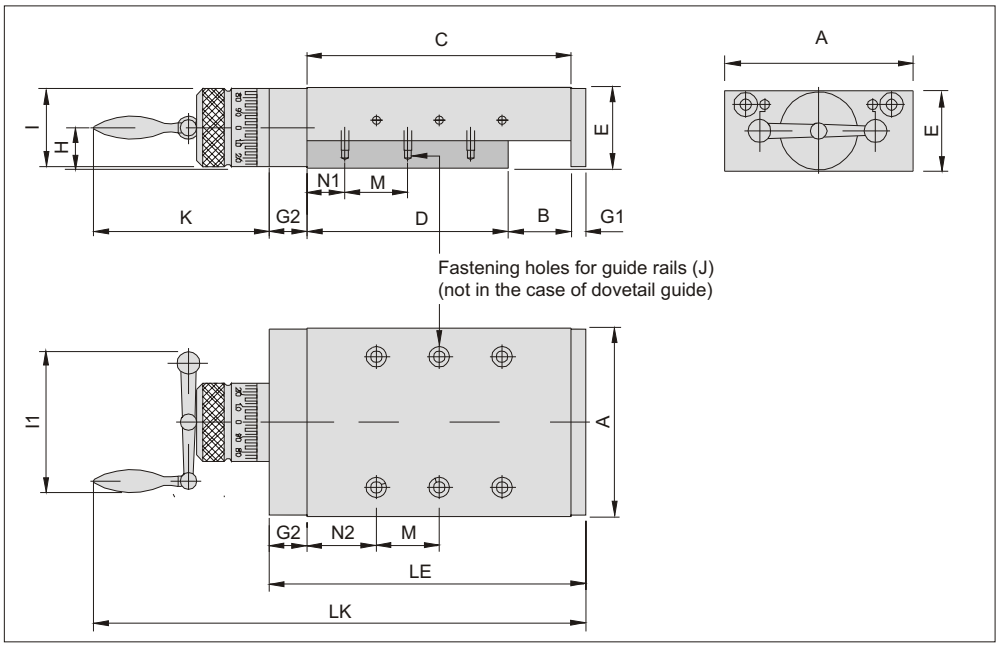

Type H slides

The slides **Type H** are available with the following guide types:

Type RH = roller guide
Type KH = ball guide
Type TVH = plastic-coated guide rail
Type NH = needle guide
Type SH = dovetail guide

For widths greater than 100, the slides are fitted as standard with a hand wheel.

Rail size	Read-off accuracy	Spindle	Weight [kg]	(SH)	Type RH Article No.	Type KH Article No.	Type TVH* Article No.	Type NH Article No.	Type SH Article No.
3	0,02	M6x1	1,0	1,1	341301	345501	340301	-	342301
			1,3	1,4	341302	345502	340302	-	342302
			1,3	1,5	341303	345503	340303	-	342303
			1,6	2,0	341304	345504	340304	-	342304
3	0,02	M8x1	1,9	2,1	341305	345505	340305	-	342305
			2,5	2,8	341306	345506	340306	-	342306
			3,1	3,5	341307	345507	340307	-	342307
			3,7	4,2	341308	345508	340308	-	342308
			3,9	4,4	341309	345509	340309	-	342309
			4,1	4,6	341310	345510	340310	-	342310
6	0,02	M12x1	4,0	5,0	341311	345511	340311	347311	342311
			6,0	7,0	341312	345512	340312	347312	342312
			8,0	9,0	341313	345513	340313	347313	342313
			11,0	12,0	341314	345514	340314	347314	342314
			13,0	14,0	341315	345515	340315	347315	342315
6	0,02	M20x1	11,0	12,0	341316	345516	340316	347316	342316
			15,0	16,0	341317	345517	340317	347317	342317
			21,0	23,0	341318	345518	340318	347318	342318
			22,0	24,0	341319	345519	340319	347319	342319
			31,0	34,0	341320	345520	340320	347320	342320
9	0,02	M20x1	22,0	23,0	341321	-	340321	347321	342321
			32,0	34,0	341322	-	340322	347322	342322
			43,0	47,0	341323	-	340323	347323	342323
			46,0	50,0	341324	-	340324	347324	342324
			49,0	54,0	341325	-	340325	347325	342325
			61,0	67,0	341326	-	340326	347326	342326
9	0,02	TR26x2	64,0	68,0	341327	-	340327	347327	342327
			88,0	93,0	341328	-	340328	347328	342328
			94,0	100,0	341329	-	340329	347329	342329
			100,0	108,0	341330	-	340330	347330	342330
			124,0	133,0	341331	-	340331	347331	343331

**The information on loads can be found on Page 32*

Cross-sections

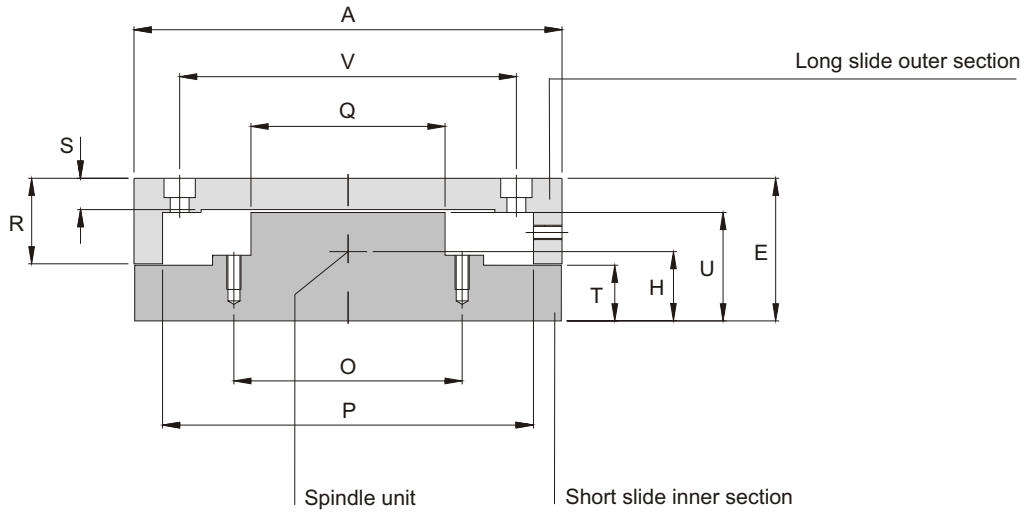

Type R, K, TV, N	A	E	H	R	S	P	V	U	T	Q	O
	30	17	-	11	6,5	22	18,4	9	5,6	5	8,6
	50	25	12,5	17	6	44,5	37,5	18	7,6	8,5	15,5
	75	32	16	21	8	59	52	23	10,5	23	30
	100	42	18	27	11	86	74	30	14,5	24	36
	150	50	24,3	30	11	130	118	38	19,5	68	80
	200	58	28,3	42	14	170	152	43	15,5	82	100
	300	75	35	50	22	260	242	52	24	172	190

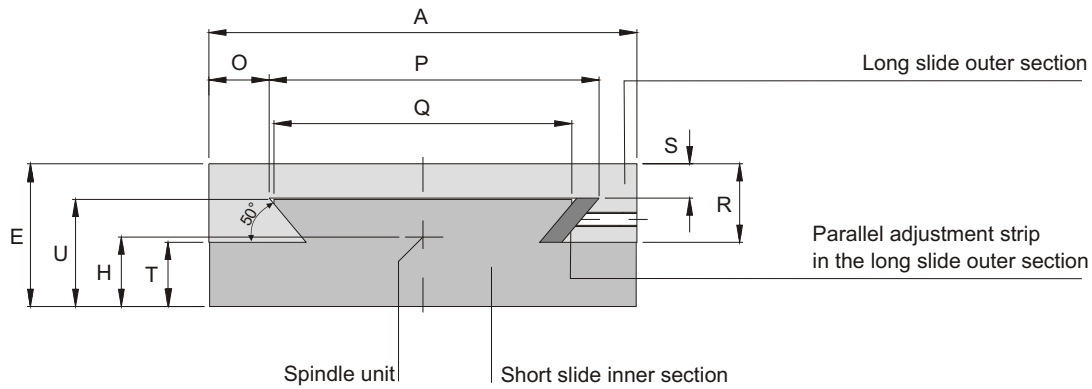

Type S	A	E	H	R	S	P	O	U	T	Q
	30	17	8,5	7,8	3,8	17,5	7	13	9,2	15
	50	25	12,5	15,5	7	35,6	9,1	17,5	9,5	28,5
	75	32	16	19,5	9	50,9	14	22,5	12,5	44
	100	42	18	26,5	10	72,7	15,6	26,5	15,5	66
	150	50	24,3	27,5	12	115,6	21	37,5	22,5	104,4
	200	58	28,3	35,5	15	149,5	29,1	42,5	22,5	138
	300	75	35	50,5	22	238,5	35,8	52,5	24,5	225

Spindle end

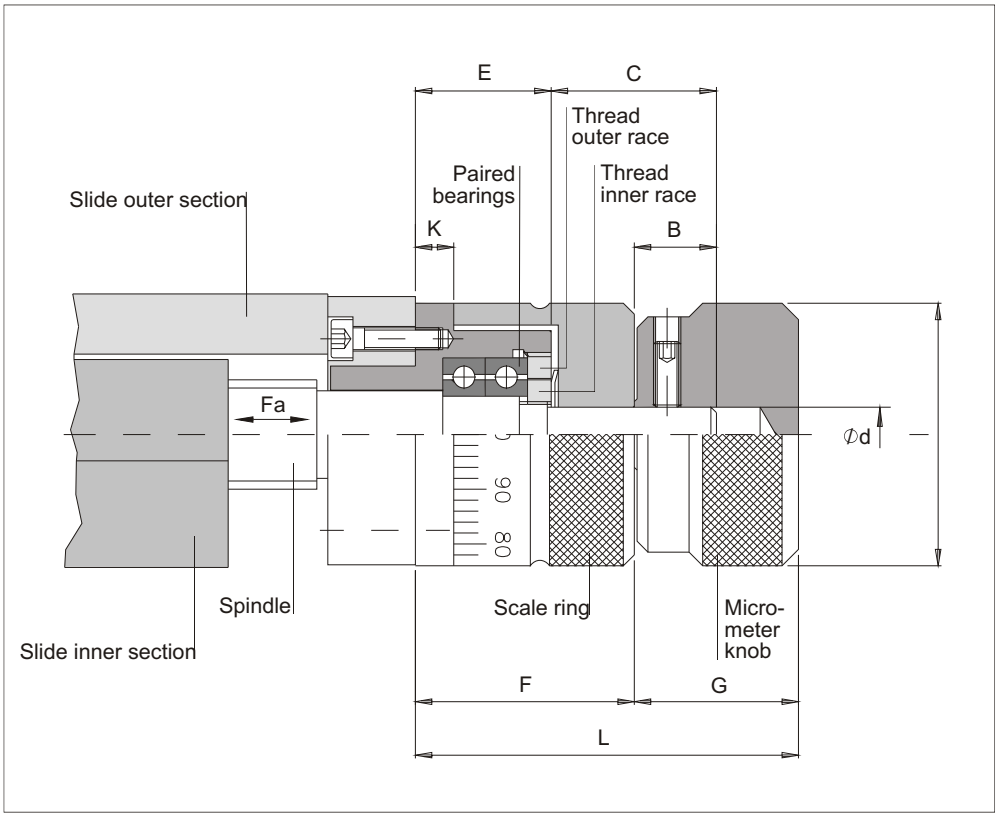

Spindle end with micrometer knob

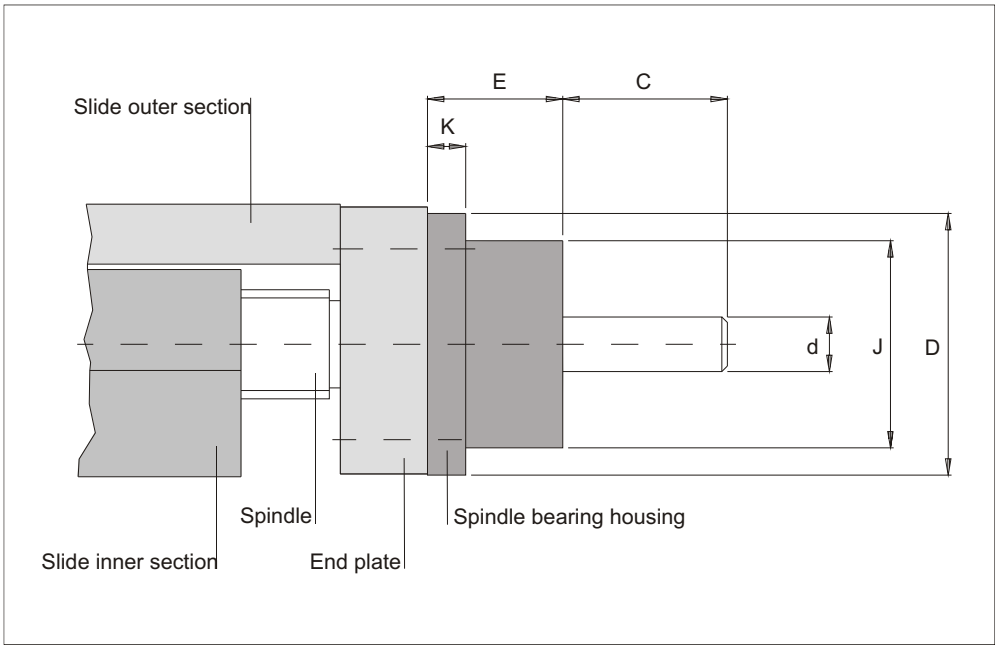

Spindle end for customer adaption

Slide width	B	C	Φd_{H7}	ΦD_{H7}	E	F	G	I	J	K	L	Axial load-bearing capacity Fa, sta-
tic												
30	-	20	4	23,9	-	13	11	13	-	-	24	266 N
50	7	20,2	5	23,9	12,8	26	16	24	20	5	42	266 N
75	8	18,2	6	31	18,8	29	18	31	25	5	47	374 N
100	8	18,2	6	35	18,8	29	20	35	28	5	49	374 N
150	15	30,2	10	48	24,8	48	30	48	39	7	70	1075 N
200	15	30,2	10	48	24,8	40	30	48	39	7	70	1075 N

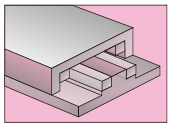

Loads and torques

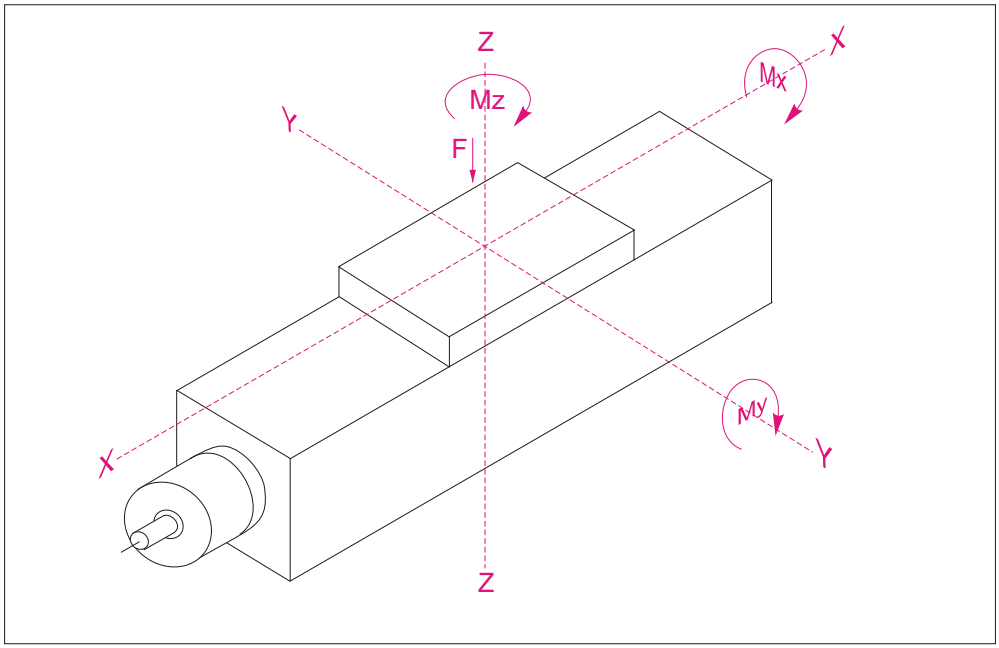

The defined load F (load-bearing capacity) applies to centrally vertical slides under a centrically acting, resting surface load.
A pretensioning of the guide system of approx. 20% was used as a basis for the details. In the case of the details of the max. loads, the slide must be clamped on a level mounting surface.

K = ball
R = roller
N = needle
S = dovetail
TV = plastic-coated guide

Anti-friction and standard slideways

Max. loads [N]			Anti-friction slideways			Standard slideways				
Width	AT Dim. C	IT Dim. D	K dynamic	R dynamic	N dynamic	S dynamic	S coated dynamic	S coated static	TV dynamic	TV static
30	35	25	-	-	-	295	74	664	-	-
30	55	35	-	-	-	413	103	930	-	-
30	65	35	-	-	-	413	103	930	-	-
30	85	45	-	-	-	532	133	1196	-	-
30	105	55	-	-	-	650	162	1462	-	-
50	105	80	433	867	-	1613	403	3629	90	450
50	155	105	533	1213	-	2117	529	4763	120	600
50	180	105	433	867	-	2117	529	4763	120	600
50	230	130	533	1213	-	2621	655	5897	150	750
75	105	80	433	867	-	2269	567	5105	90	450
75	155	105	533	1213	-	2978	744	6700	120	600
75	205	130	633	1387	-	3687	922	8295	150	750
75	255	155	733	1560	-	4396	1099	9891	180	900
75	280	155	633	1387	-	4396	1099	9891	180	900
75	305	155	533	1213	-	4396	1099	9891	180	900
100	135	110	693	2120	14133	4014	1036	9321	280	1400
100	210	160	1040	2827	21200	5838	1506	13558	420	2100
100	310	210	1300	3533	25440	7662	1977	17796	560	2800
100	410	260	1560	4240	29680	9487	2448	22033	700	3500
100	510	310	1820	4947	34627	11311	2919	26270	840	4200
150	210	160	1040	2827	21200	6558	1639	14755	420	2100
150	310	210	1300	3533	25440	8607	2152	19366	560	2800
150	460	310	2080	5653	38867	12706	3177	28589	840	4200
150	510	310	1820	4947	34627	12706	3177	28589	840	4200
150	710	460	3033	9187	56533	18854	4714	42422	1260	6300
200	260	210	2200	6933	35027	12147	3037	27331	1067	5333
200	410	310	3200	10400	51120	17932	4483	40346	1600	8000
200	610	410	4000	12133	61533	23716	5929	53361	2133	10667
200	710	410	3200	10400	51120	23716	5929	53361	2133	10667
200	810	410	2600	8667	40707	23716	5929	53361	2133	10667
200	1010	510	3200	10400	51120	29500	7375	66376	2667	13333
300	410	310	3200	10400	51120	23497	5874	52868	1600	8000
300	610	410	4000	12133	61535	31076	7769	69922	2133	10667
300	710	410	3200	10400	51120	31076	7769	69922	2133	10667
300	810	410	2600	8667	40707	31076	7769	69922	2133	10667
300	1010	510	3200	10400	51120	38656	9664	86976	2667	13333

Anti-friction slideways, dynamic

Max. torques [Nm]			K			R			N		
Width	AT Dim. C	IT Dim. D	Mx dynamic	My dynamic	Mz dynamic	Mx dynamic	My dynamic	Mz dynamic	Mx dynamic	My dynamic	Mz dynamic
30	35	25	-	-	-	-	-	-	-	-	-
30	55	35	-	-	-	-	-	-	-	-	-
30	65	35	-	-	-	-	-	-	-	-	-
30	85	45	-	-	-	-	-	-	-	-	-
30	105	55	-	-	-	-	-	-	-	-	-
50	105	80	10	4	4	19	15	19	-	-	-
50	155	105	12	6	6	27	30	30	-	-	-
50	180	105	10	4	4	19	15	19	-	-	-
50	230	130	12	6	6	27	30	30	-	-	-
75	105	80	15	4	4	30	15	19	-	-	-
75	155	105	18	6	6	41	30	30	-	-	-
75	205	130	22	9	9	47	39	39	-	-	-
75	255	155	25	12	12	53	47	55	-	-	-
75	280	155	22	9	9	47	39	39	-	-	-
75	305	155	18	6	6	41	30	30	-	-	-
100	135	110	32	9	9	97	59	58	389	198	198
100	210	160	48	20	20	130	96	127	583	438	438
100	310	210	60	31	31	162	148	187	700	628	628
100	410	260	72	44	44	194	210	257	816	851	851
100	510	310	83	60	60	227	283	339	952	1154	1154
150	210	160	77	20	20	210	96	127	943	439	439
150	310	210	96	31	31	262	148	187	1132	628	628
150	460	310	154	78	78	419	368	432	1730	1451	1451
150	510	310	135	60	60	367	283	339	1541	1154	1154
150	710	460	225	164	164	681	991	992	2516	2922	2922
200	260	210	231	62	62	728	374	374	2207	998	998
200	410	310	336	127	127	1092	811	811	3221	2109	2109
200	610	410	420	196	196	1274	1043	1248	3877	3022	3022
200	710	410	336	127	127	1092	811	811	3221	2109	2109
200	810	410	273	85	85	910	572	572	2565	1343	1343
200	1010	510	336	127	127	1092	811	811	3221	2109	2109
300	410	310	576	127	127	1872	811	811	5521	2109	2109
300	610	410	720	196	196	2184	1043	1248	6646	2716	2716
300	710	410	576	127	127	1872	811	811	5521	2109	2109
300	810	410	468	85	85	1560	572	572	4396	1343	1343
300	1010	510	576	127	127	1872	811	811	5521	2109	2109

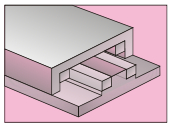

Loads and torques

Standard slideways, static

Max. torques [Nm]			TV			S coated		
Width	**AT Dim. C**	**IT Dim. D**	**Mx static**	**My static**	**Mz static**	**Mx static**	**My static**	**Mz static**
30	35	25	-	-	-	1,2	0,5	0,6
30	55	35	-	-	-	1,7	0,9	1,1
30	65	35	-	-	-	1,7	0,9	1,1
30	85	45	-	-	-	2,1	1,5	1,8
30	105	55	-	-	-	2,6	2,3	2,7
50	105	80	12	45	45	12,4	10,3	12,2
50	155	105	16	80	80	16,3	17,7	21,1
50	180	105	16	80	80	16,3	17,7	21,1
50	230	130	20	125	125	20,2	27,1	32,3
75	105	80	18	45	45	25,1	12,7	15,1
75	155	105	25	80	80	33,0	21,9	26
75	205	130	31	125	125	41,9	33,5	39,9
75	255	155	37	180	180	49	48	57
75	280	155	37	180	180	49	48	57
75	305	155	37	180	180	49	48	57
100	135	110	77	187	187	69	40	45
100	210	160	116	420	420	101	80	95
100	310	210	154	747	747	132	138	164
100	410	260	193	1167	1167	164	211	251
100	510	310	231	1680	1680	195	300	357
150	210	160	187	420	420	183	75	89
150	310	210	249	747	747	241	130	154
150	460	310	374	1680	1680	355	281	335
150	510	310	374	1680	1680	355	281	335
150	710	460	561	3780	3780	527	620	738
200	260	210	672	1422	1422	427	171	203
200	410	310	1008	3200	3200	630	372	443
200	610	410	1344	5689	5689	834	651	775
200	710	410	1344	5689	5689	834	651	775
200	810	410	1344	5689	5689	834	651	775
200	1010	510	1680	8889	8889	1037	1008	1200
300	410	310	1728	3200	3200	1361	517	616
300	610	410	2304	5689	5689	1801	905	1078
300	710	410	2304	5689	5689	1801	905	1078
300	810	410	2304	5689	5689	1801	905	1078
300	1010	510	2880	8889	8889	2240	1401	1668

Standard slideways, dynamic

Max. torques [Nm]			TV			S			S coated		
Width	AT Dim. C	IT Dim. D	Mx dynamic	My dynamic	Mz dynamic	Mx dynamic	My dynamic	Mz dynamic	Mx dynamic	My dynamic	Mz dynamic
30	35	25	-	-	-	0,5	0,2	0,3	0,1	0,05	0,1
30	55	35	-	-	-	0,7	0,4	0,5	0,2	0,1	0,1
30	65	35	-	-	-	0,7	0,4	0,5	0,2	0,1	0,1
30	85	45	-	-	-	0,9	0,7	0,8	0,2	0,2	0,2
30	105	55	-	-	-	1,2	1,0	1,2	0,3	0,3	0,3
50	105	80	2	9	9	5	5	6	1,4	1,1	1,4
50	155	105	3	16	16	7	8	9	1,8	2,0	2,3
50	180	105	3	16	16	7	8	9	1,8	2,0	2,3
50	230	130	4	25	25	9	12	14	2,2	3,0	3,6
75	105	80	4	9	9	11	6	7	2,8	1,4	1,7
75	155	105	5	16	16	14	10	12	3,7	2,4	2,9
75	205	130	6	25	25	18	15	18	4,5	3,7	4,4
75	255	155	7	36	36	21	21	25	5,4	5,3	6,3
75	280	155	7	36	36	21	21	25	5,4	5,3	6,3
75	305	155	7	36	36	21	21	25	5,4	5,3	6,3
100	135	110	15	37	37	30	16	19	8	4,2	5
100	210	160	23	84	84	43	33	40	11	8,9	10,6
100	310	210	31	149	149	57	57	68	15	15,3	18,2
100	410	260	39	233	233	70	88	105	18	23,4	28
100	510	310	46	336	336	84	125	149	22	33,3	40
150	210	160	37	84	84	82	33	40	20	8	10
150	310	210	50	149	149	107	57	68	27	14	17
150	460	310	75	336	336	158	125	149	40	31	37
150	510	310	75	336	336	158	125	149	40	31	37
150	710	460	112	756	756	234	276	328	59	69	82
200	260	210	134	284	284	190	76	90	47	19	23
200	410	310	202	640	640	280	166	197	70	41	50
200	610	410	269	1138	1138	371	289	345	93	72	87
200	710	410	269	1138	1138	371	289	345	93	72	87
200	810	410	269	1138	1138	371	289	345	93	72	87
200	1010	510	336	1778	1778	461	448	533	115	112	133
300	410	310	346	640	640	605	230	274	151	58	69
300	610	410	461	1138	1138	800	402	479	200	101	120
300	710	410	461	1138	1138	800	402	479	200	101	120
300	810	410	461	1138	1138	800	402	479	200	101	120
300	1010	510	576	1778	1778	995	623	741	249	156	185

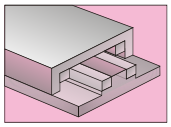

Standard hole patterns

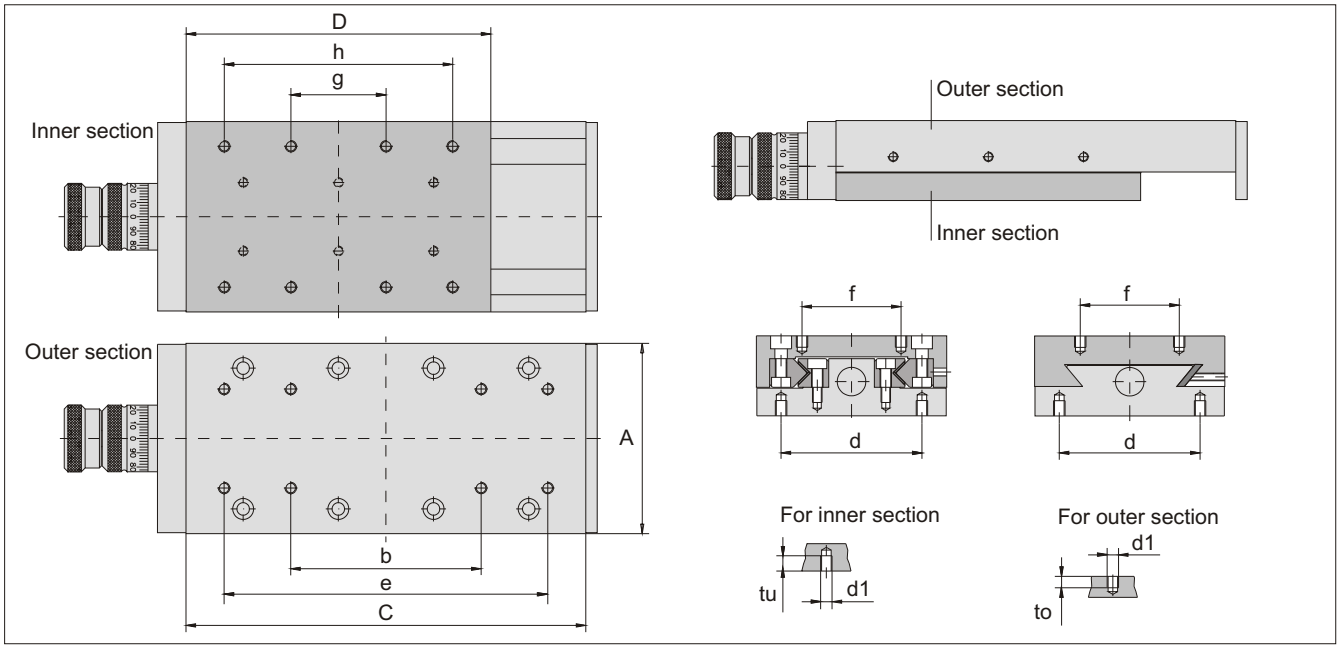

Standard hole pattern, outer section

Width A	Length C	b	e	to	d1	f	Art. No.
50	105	65	-	4	4 x M4	24	319401
50	155	115	-	4	4 x M4	24	319402
50	180	140	-	4	4 x M4	24	319403
50	230	190	-	4	4 x M4	24	319404
75	105	65	-	5	4 x M5	34	319405
75	155	115	-	5	4 x M5	34	319406
75	205	165	-	5	4 x M5	34	319407
75	255	215	-	5	4 x M5	34	319408
75	280	240	-	5	4 x M5	34	319409
75	305	265	-	5	4 x M5	34	319410
100	135	95	-	6	4 x M6	52	319496
100	160	120	-	6	4 x M6	52	319497
100	210	170	-	6	4 x M6	52	319412
100	310	90	270	6	8 x M6	52	319413
100	410	160	370	6	8 x M6	52	319414
100	510	260	470	6	8 x M6	52	319415
150	210	170	-	6	4 x M8	95	319416
150	310	90	270	6	8 x M8	95	319417
150	460	240	420	6	8 x M8	95	319418
150	510	290	470	6	8 x M8	95	319419
150	710	290	670	6	8 x M8	95	319420
200	260	220	-	8	4 x M10	120	319494
200	310	90	270	8	8 x M10	120	319495
200	410	190	370	8	8 x M10	120	319422
200	610	190	570	8	8 x M10	120	319423
200	710	290	670	8	8 x M10	120	319424
200	810	290	770	8	8 x M10	120	319425
200	1010	490	970	8	8 x M10	120	319426
300	410	190	370	15	8 x M12	200	319427
300	610	190	570	15	8 x M12	200	319428
300	710	290	670	15	8 x M12	200	319429
300	810	290	770	15	8 x M12	200	319430
300	1010	490	970	15	8 x M12	200	319431

Standard hole pattern, inner section

Width A	Length D	g	h	d	d1	tu	Art. No.
50	80	40	-	37	4 x M4	4	319480

Standard hole pattern, inner section (continued)

Width A	Length D	g	h	d	d1	tu	Art. No.
50	155	115	-	37	4 x M4	4	319441
50	180	140	-	37	4 x M4	4	319442
50	230	190	-	37	4 x M4	4	319443
75	80	40	-	56	4 x M5	5	319482
75	105	65	-	56	4 x M5	5	319444
75	130	90	-	56	4 x M5	5	319483
75	155	115	-	56	4 x M5	5	319445
75	205	165	-	56	4 x M5	5	319446
75	255	215	-	56	4 x M5	5	319493
75	280	240	-	56	4 x M5	5	319448
75	305	265	-	56	4 x M5	5	319449
100	110	70	-	74	4 x M6	8	319484
100	160	120	-	74	4 x M6	8	319485
100	210	170	-	74	4 x M6	8	319451
100	260	220	-	74	4 x M6	8	319486
100	310	90	270	74	8 x M6	8	319452
100	410	160	370	74	8 x M6	8	319453
100	510	260	470	74	8 x M6	8	319454
150	160	120	-	120	4 x M8	12	319487
150	210	170	-	120	4 x M8	12	319455
150	310	90	270	120	8 x M8	12	319456
150	460	240	420	120	8 x M8	12	319457
150	510	290	470	120	8 x M8	12	319458
150	710	290	670	120	8 x M8	12	319459
200	210	170	-	155	4 x M10	8	319488
200	310	90	270	155	8 x M10	8	319489
200	410	190	370	155	8 x M10	8	319461
200	510	290	470	155	8 x M10	8	319490
200	610	190	570	155	8 x M10	8	319492
200	710	290	670	155	8 x M10	8	319493
200	810	290	770	155	8 x M10	8	319494
200	1010	390	970	155	8 x M10	8	319495
300	310	90	270	255	8 x M12	15	319491
300	410	190	370	255	8 x M12	15	319466
300	510	290	470	255	8 x M12	15	319492
300	610	190	570	255	8 x M12	15	319467
300	710	290	670	255	8 x M12	15	319468
300	810	290	770	255	8 x M12	15	319469

Mounting bracket

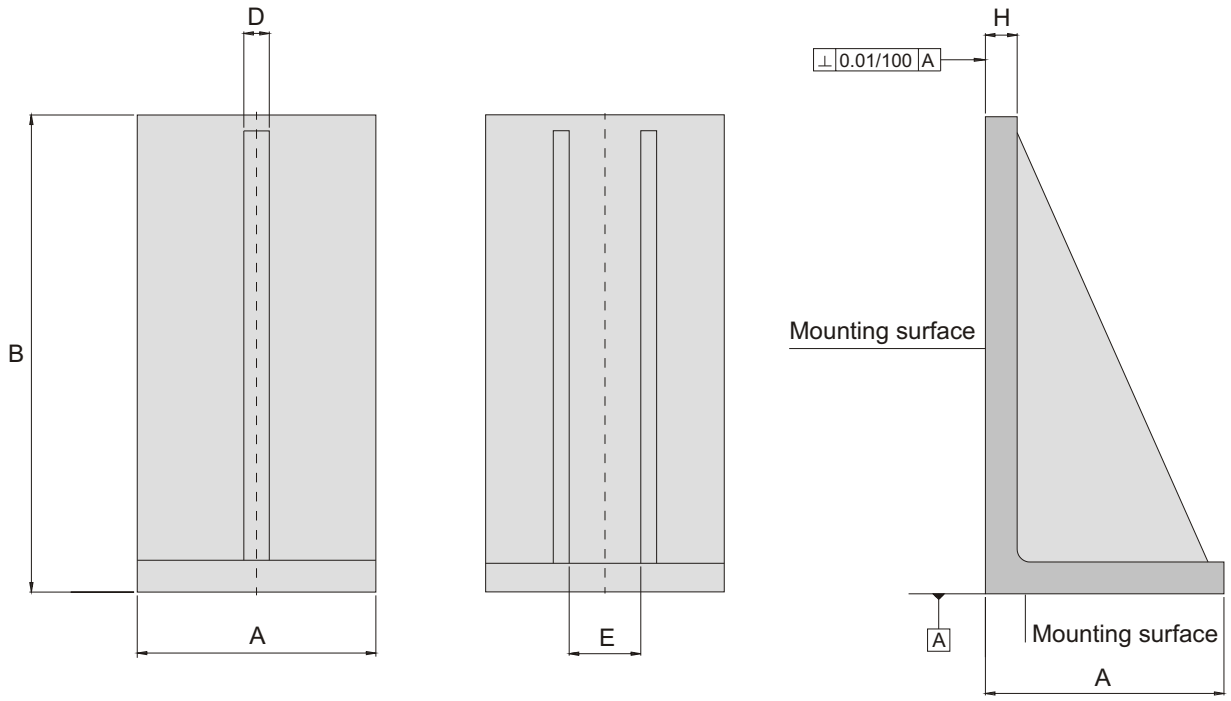

For slide width 50 to 100

For slide width 150 to 300

Mounting bracket, Type A

Slide width	Grey cast iron/Art. No.	AL/Art. No.	A	B	C	D	E	Ribs
30	319027	-	30	30	5	-	-	0
50	319002	319128	50	50	8	8	-	1
75	319003	319129	75	75	10	8	-	1
100	319004	319130	100	100	15	12	-	1
150	319005	319131	150	150	18	10	50	2
200	319006	319132	200	200	22	10	75	2

Mounting bracket, Type B

Slide width	Grey cast iron/Art. No.	AL/Art. No.	A	B	C	D	E	Ribs
50	319021	319121	50	100	8	8	-	1
75	319022	319122	75	150	10	8	-	1
100	319023	319123	100	200	15	12	-	1
150	319024	319124	150	300	18	10	45	2
200	319025	319125	200	350	22	10	70	2
300	319026	319126	300	400	30	15	145	2

Grey cast iron version
The mounting surfaces are ground at the factory.

AL version
The mounting surfaces are finely-ground at the factory.

T-grooves

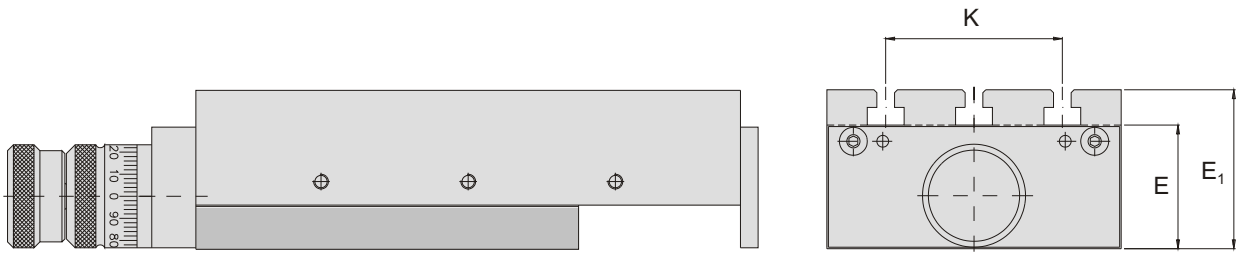

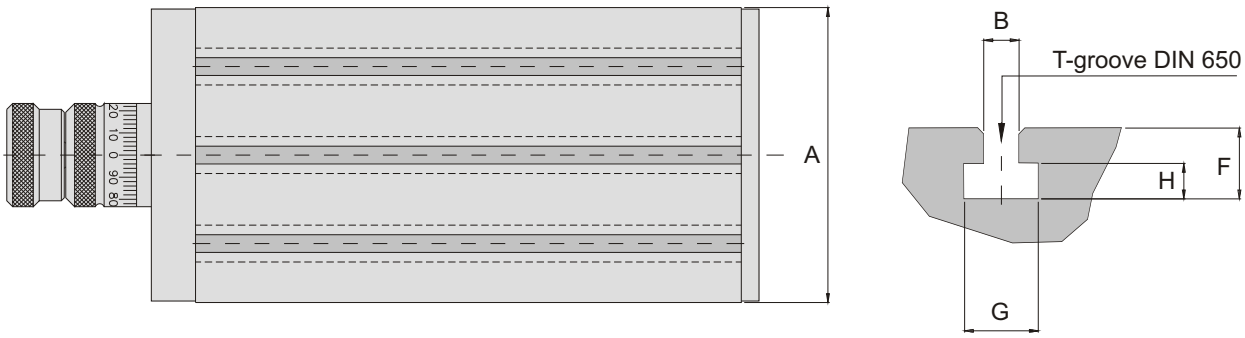

Slide width	A	B	G	E	E_1	F	H	K	Number of T-grooves
	50	6	12,5	25	37	12	6	-	1
	75	6	12,5	32	44	12	6	-	1
	100	6	12,5	42	54	12	6	60	2
	150	8	16	50	66	16	8	90	2
	200	8	16	58	74	16	8	120	2
	300	12	19	75	93	18	9	240	3

Rotary tables and clamps

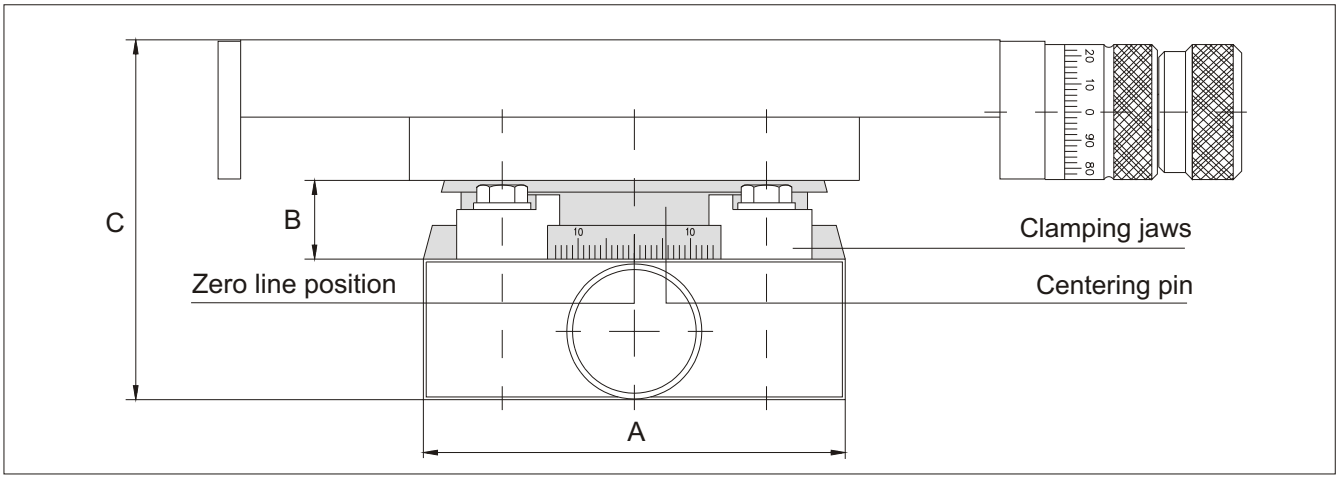

Dimensions table

Rotary table A	B	C	Centering pin diameter ϕ	Number of clamping jaws	Article
No.					
75	18	82	12	2	319401
100	18	102	12	2	319402
150	20	120	25	4	319403
200	20	136	25	4	319404

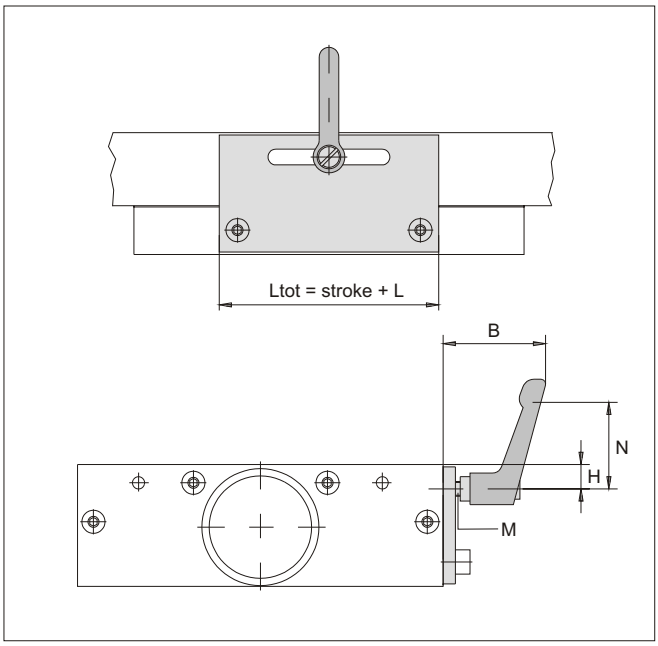

Clamp type F

The disengageable clamping lever allows play-free fixing of the slide.

Clamping takes place on the pressure plate.
Not possible in the case of the version with the scraper.

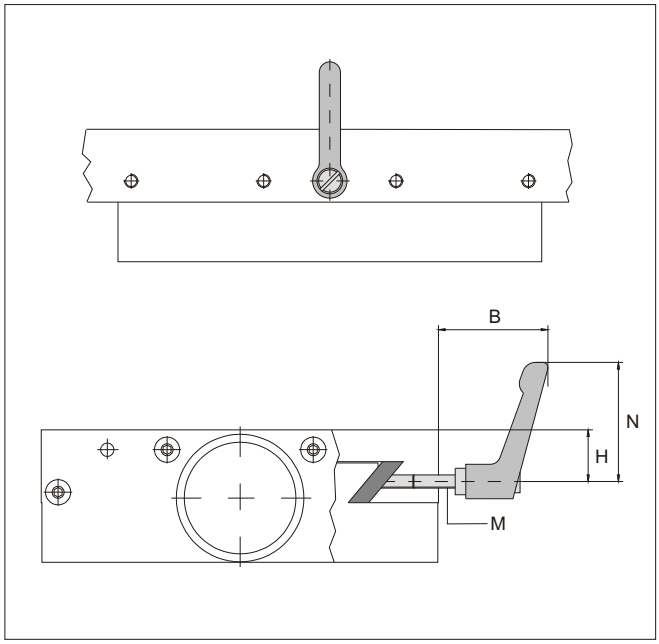

Clamp type ZL

The disengageable clamping lever allows the slide to be fixed. Clamping takes place on the feed rail.

2 clamping levers are used in

Clamp type F

Width A	Height E	H	N	B max.	L	M	Art. No.
50	25	4,5	40	35	20	M4	320139
75	32	13	40	35	20	M4	320140
100	42	11	40	35	20	M5	320141
150	50	11	40	35	20	M5	320142
200	58	10	40	35	20	M6	320143
300	75	13	80	60	20	M10	320144

Clamp type ZL

Width A	Height E	H	N	B max.	M	Art. No.
50	25	12	40	40	M4	320145
75	32	14	40	40	M5	320147
100	42	21,5	40	40	M5	320149
150	50	19,5	40	40	M6	320151
200	58	25,5	40	40	M6	320153
300	75	36,5	65	70	M8	320155

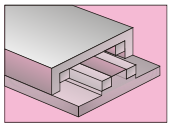

With built-in cylinder

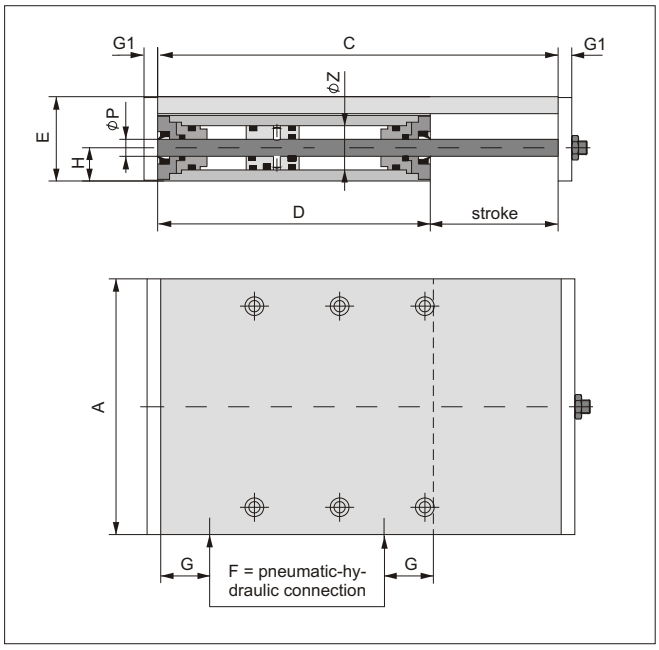

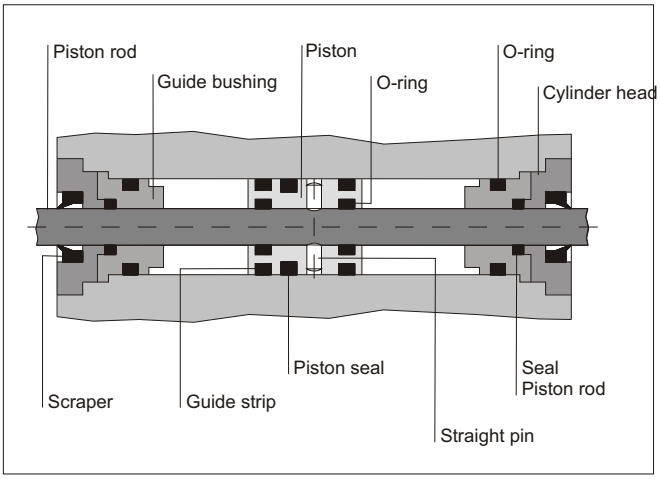

Function principle: Sealing system

Only for type SE size 100

Width A	C	D	E	Stroke	ϕZ	ϕP	G	F	Piston surfa-
ce									
100	210	160	50	50	30	12	37	1/4"	5,92 cm^2
100	310	210	50	100	30	12	37	1/4"	5,92 cm^2
100	410	260	50	150	30	12	37	1/4"	5,92 cm^2
100	510	310	50	200	30	12	37	1/4"	5,92 cm^2

Only for type RE, KE, NE, TVE size 100					○	○			
Width A	C	D	E	Stroke	/ Z	/ P	G	F	Piston surfa-
ce									
100	135	110	42	25	20	10	23	1/8"	2,35 cm^2
100	210	160	42	50	20	10	38	1/8"	2,35 cm^2
100	310	210	42	100	20	10	38	1/8"	2,35 cm^2
100	410	260	42	150	20	10	38	1/8"	2,35 cm^2
					○	○			
Only for type RE, KE, NE, TVE, SE size 150 upwards									
Width A	**C**	**D**	**E**	**Stroke**	**/ Z**	**/ P**	**G**	**F**	**Piston surfa-**
ce									
150	210	160	50	50	30	12	37	1/4"	5,92 cm^2
150	310	210	50	100	30	12	37	1/4"	5,92 cm^2
150	460	310	50	150	30	12	37	1/4"	5,92 cm^2
150	510	310	50	200	30	12	37	1/4"	5,92 cm^2
200	260	210	58	50	30	12	37	1/4"	5,92 cm^2
200	410	310	58	100	30	12	37	1/4"	5,92 cm^2
200	610	410	58	200	30	12	37	1/4"	5,92 cm^2
200	710	410	58	300	30	12	37	1/4"	5,92 cm^2

Type RGA with scraper and base plate

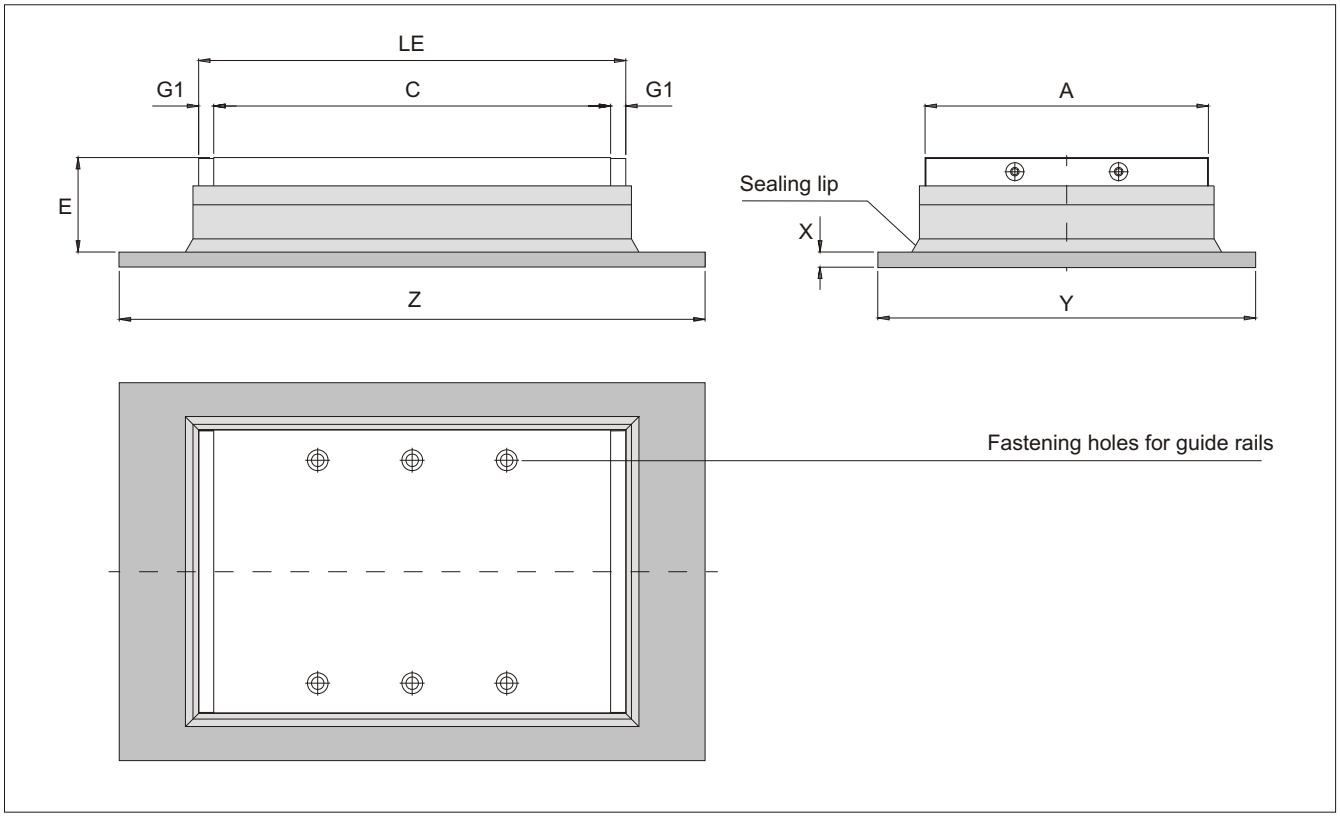

Width A	Length AT C	Stroke B	Length IT D	Height E	Length AT LE	G1	Length Z	Height X	Width Y	Article No.
50	105	25	80	25	117	6	130	4	80	319410
50	155	50	105		167		255			319411
50	180	75	105		192		305			319412
50	230	100	130		242		380			319413
75	105	25	80	32	117	6	130	6	120	319414
75	155	50	105		167		255			319415
75	105	75	130		217		330			319416
75	255	100	155		267		405			319417
75	280	125	155		292		455			319418
75	305	150	155		317		505			319419
100	135	25	110	42	147	6	210	8	150	319420
100	210	50	160		222		310			319421
100	310	100	210		322		460			319422
100	410	150	260		422		610			319423
100	510	200	310		522		760			319424
150	210	50	160	50	226	8	310	8	200	319425
150	310	100	210		326		460			319426
150	460	150	310		476		660			319427
150	510	200	310		526		760			319428
200	260	50	210	58	276	8	360	10	250	319429
200	410	100	310		426		560			319430
200	610	200	410		626		860			319431
300	410	100	310	75	430	10	560	20	350	319432
300	610	200	410		630		860			319433

Note on ordering
To order with the scraper and base plate, choose the designation **RGA** for your selected slide type.

Example:
Type RE 100.310.100.**RGA**

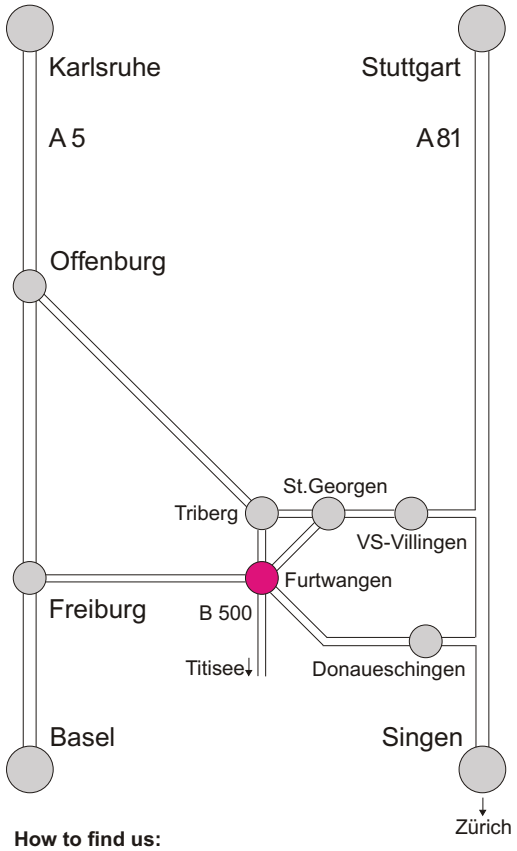

How to find us:
In Furtwangen, take the B 500 towards Triberg.
The IEF building is easy to see on the right as
you leave the town.

I d e e n · **E** r f a h r u n g · **F** o r t s c h r i t t

IEF WERNER®

With the compliments of:

IEF Werner GmbH
Wendelhofstraße 6
D-78120 Furtwangen

Telephone 07723/925-0
Fax 07723/925-100